SPECIFICATION OF PRODUCTS

WATER TANKER MOUNTED ON TWO WHEEL AGRICULTURE TRACTOR TRAILER capacity 3500 Lit. & 4500 Lit. WITH 750x16 & 9.00X16 NEW TYRE AND TUBE

1. **Chassis:**
   The chassis shall be fabricated as per standard practice to mount the M.S. Tank. All the joint shall be welded properly as per standard practice.

   The chassis frame have two longitudinal members having 125 x 65 mm. (ISMC) channel section or Auto channel and 3 cross member of the channel having 100 x 50 mm. (ISMC).

   The overall approximate dimensions of various tanker trolley chassis shall be as under :--

S. No.	Approximate Capacity	Length	Width
1.	3500 Liter.	2880 mm.	780 mm.
2.	4500 Liter.	3450 mm.	780 mm.

2. **Draw Bar (Chassis) :**
   Draw Bar shall be centrally fitted in Box or Triangular v shape welded together made out of MS channel of size 125 x 65 mm. (ISMC) channel section or Auto channel with eye hook made out of 40 mm. diameter MS bar.

3. **Axle Assembly :**
   Axle shall be made from 72 x 72 mm. x 1650 mm. square bar or 85 mm. square Hollow section with both the end machined and threaded and provided with iron hubs and hexagonal lock nut, fitted with twin taper roller bearing and provided with grease nipples for greasing the moving parts.

4. **Leaf Spring :**
   Two set of leaf spring consisting of 13 leaves of size 70 x 10 mm. minimum 900 mm. long (distance between two pin) of alloy steel shall be provided. These leaf spring shall be fixed with frame by means of complete cast iron bracket assembly.

5. **Tyre Tubes & Wheel Assembly :**
   Two number of New tyres of 750 x 16 for 3500 liter and 9.00 x 16 for 4500 liter with tube & flap assembly of slandered make (MRF, Ceat, Herculas, JK, Apolo, Birla, Modi, Michigan, Goodyear, Bridgestone etc) shall be provided with double plated rim 5 mm. thick with 8 No. of holes.

6. **Shell of the Water Tanker :--**
   The water tanker should have capacity of 3500 lit. and 4500 liters approximate manufactured in semi elliptical shape. The tank shall be made out of 2.50 mm. thick MS sheet, and maximum number of plates are not more than 4 No., End plates of the tank shall be made of 2.50 mm thick MS sheet with maximum in two No. plate.

S. No.	Approximate Capacity	Major Axis	Minor Axis	Length
1.	3500 Liter.	1600 mm.	1150 mm.	2430 mm.
2.	4500 Liter.	1650 mm.	1190 mm.	3000 mm.

The tank shall be reinforced from inside on end plates by two angle iron section 25 x 25 x 3 (ISA) in the Plus shape.

One baffle plate made of 3.00 mm. shall be provided inside the tank this plate shall be properly welded with the two Angle in plus position touching major axis and minor axis peak points. The height of the baffle plate shall be just half of the minor axis of the tank.

7. Manhole:--

One manhole with hinged cover shall be provided at the top of the tank . The cover of the tank shall be fabricated by 3.00 mm thick MS sheet. The collar of the cover and manhole shale be made out of 3.00 mm. MS sheet. Locking arrangement for cover shall also be provided.

The shell of the tank shall be rested on the chassis by means of six number of guide made out of 100 x 50 (ISMC) channel section.

8. Pump set stand :--

Pump Set Stand shall be made of 125 x 65 mm. (ISM C) channel or Auto channel suitable for pumps.

9 General requirements of all types of Tanker:--

1. **Outlet**
   Outlet 63 mm. NB class "A" GI nipple of 1 cm length (minimum) be provided at the rear of the tank along with required 75 mm cast Iron/steel ball valve.
2. **Painting & Finishing**
   The tanker should be spray painted, with priming coat of red oxide and two coat of synthetic enamel paint and colour as desired by consignee. Interior of the tank should be painted with suitable primer followed by Non-poisonous rubber paint.
3. **Guarantee**
   The manufacturer shall furnish guarantee for one year against manufacturing defects, leakage etc., along with tender incorporating that in case of complaint they shall undertake satisfactory repair within 10 days free of coat.
4. **Inspection**
   The inspection of water tanker shall be carried out by the inspection agency nominated by Federation.

5. ± 5% Tolerance shall be provided to overall dimension of material as well as thickness of sheet & sections.

Note :-- If required minor deviation / amendment in specification may be done, after taking approval from Federation.

Water Tanker mounted on Two wheel Tractor Trailer With750 x16 tyre or 900 x 16 Capacity 3500 liter & 4500 liter.

Gp1 P3

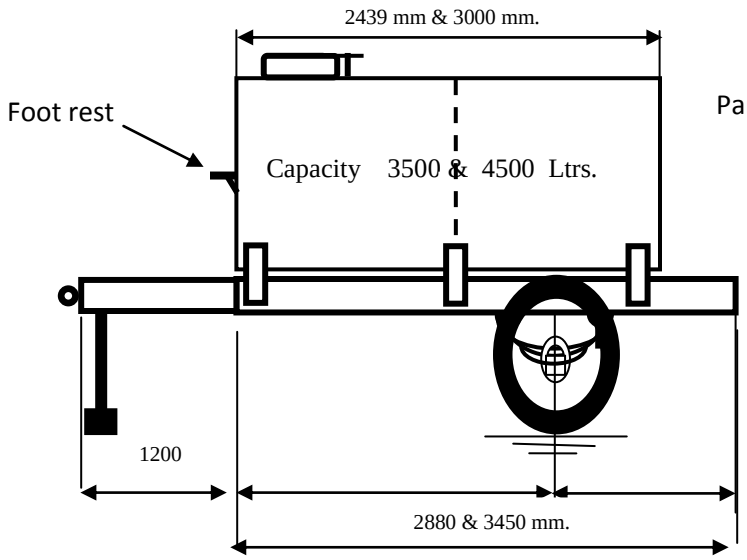

Front Elevation

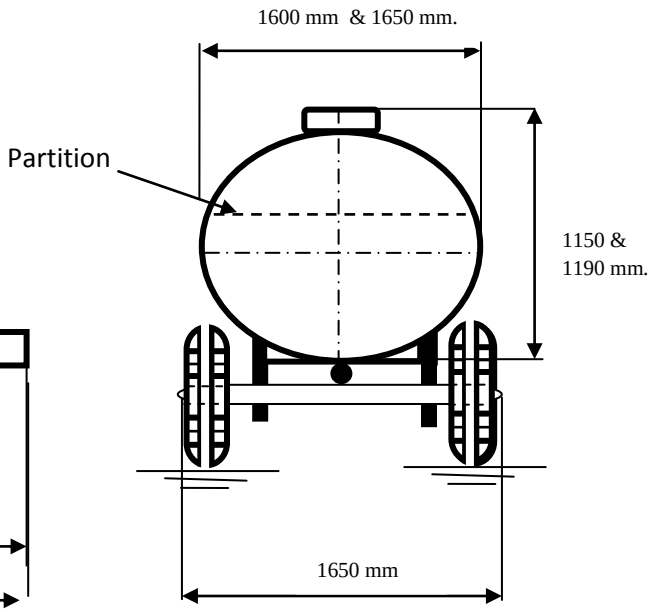

Side Elevation

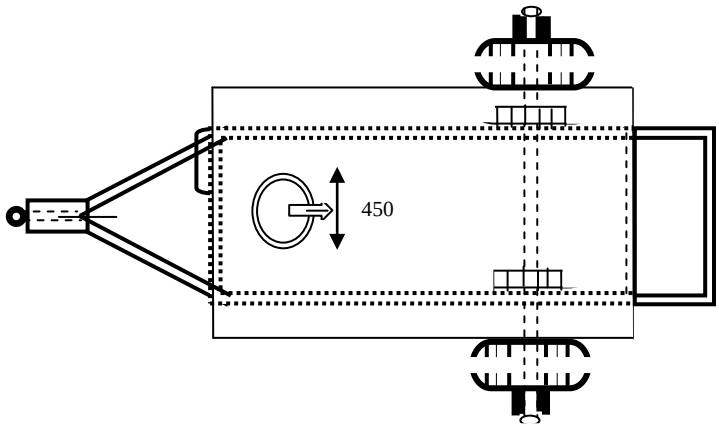

Top View

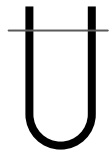

U BOLT 20 mm. DIA SIZE 583 mm x 75 mm x 583 mm.

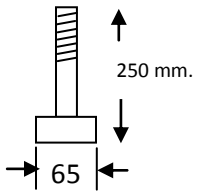

HEXAGONAL NUT & BOLT 250 x 65 mm.

1. WHEELS 759 x 16 or 900 x 16 2 NOS
2. WATER TANKER SHELL -- For 3500 Lit. 1600 x 1150 x 2430 , For 4500 lit. 1650 x 1190 x 3000 mm.
3. WATER TANKER SHEET 2.5 mm. thickness.
4. LAMINATED SPRING 70x10 1 SET 13 NOS. LEAVES, EYE TO EYE DISTANCE. -- 900 mm.
5. CHASSIS FRAME 150 x 75 mm. 1 SET 2280 x 780 mm. for 3500 lit. & 3450 x 780 mm. for 4500 Lit.
6. AXLE SIZE 1 NO. 72 mm. x 1650 mm solid or 85 mm. square hollow
7. U BOLT SIZE 18 mm.7x3x7 Inch. 8 NO
8. DRAW BAR HOOK 40 mm. 1 NO
9. STEEL HUB 8 HOLE 2 NO
10. DOUBLE PLATED RIM 5mm. 2 NO
11. BEARING 32213 & 32216 NO. 2 SET

1. UNLOADED WEIGHT 750 Kg & 890 Kg.
2. LOADED WEIGHT 4300 & 5400 kg
3. SPRING CAPACITY 6500 kg
4. Capacity 3500 Litr. & 4500 Lit

WATER TANKER MOUNTED ON TWO WHEEL AGRICULTURE TRACTOR TRAILER capacity 5000 Lit. & 5500 Lit. WITH 9.00X16 & 9.00X20 NEW TYRE AND TUBE

5. **Chassis:**
The chassis shall be fabricated as per standard practice to mount the M.S. Tank. All the joint shall be welded properly as per standard practice.

The chassis frame have two longitudinal members having 150 x 75 mm. (ISMC) channel section or Auto channel and 3 cross member of the channel having 125 x 65 mm. (ISMC).

The overall approximate dimensions of various tanker trolley chassis shall be as under :--

S. No.	Approximate Capacity	Length	Width
1.	5000 Liter.	3450 mm.	780 mm.
2.	5500 Liter.	3450 mm.	780 mm.

6. **Draw Bar (Chassis) :**
Draw Bar shall be centrally fitted in Box or Triangular v shape welded together made out of MS channel of size 150 x 75 mm. (ISMC) channel section or Auto channel with eye hook made out of 40 mm. diameter MS bar.

7. **Axle Assembly :**
Axle shall be made from 72 x 72 mm. x 1650 mm. Square bar or 85 mm. square Hollow section with both the end machined and threaded and provided with iron hubs and hexagonal lock nut, fitted with twin taper roller bearing and provided with grease nipples for greasing the moving parts.

8. **Leaf Spring :**
Two set of leaf spring consisting of 19 leaves of size 70 x 10 mm. minimum 900 mm. long (distance between two pin) of alloy steel shall be provided. These leaf spring shall be fixed with frame by means of complete cast iron bracket assembly.

9. **Tyre Tubes & Wheel Assembly :**
Two number of New tyres of 9.00 x 20 and 9.00 x 16 with tube & flap assembly of standard make (MRF, Ceat, Herculas, JK, Apolo, Birla, Modi, Michigan, Goodyear, Bridgestone etc) shall be provided with double plated rim 5 mm. thick with 8 No. of holes.

10. **Shell of the Water Tanker :--**
The water tanker should have capacity of 5000 lit. and 5500 liters approximate manufactured in semi elliptical shape. The tank shall be made out of 2.50 mm. 4mm. thick MS sheet, and maximum number of plates are not more than 4 No., End plates of the tank shall be made of 3.00 mm thick MS sheet with maximum in two No. plate.

S. No.	Approximate Capacity	Major Axis	Minor Axis	Length
1.	5000 Liter.	1675 mm.	1275 mm.	3000 mm.
2.	5500 Liter.	1700 mm.	1300 mm.	3000 mm.

The tank shall be reinforced from inside on end plates by two angle iron section 25 x 25 x 3 (ISA) in the Plus shape.

One baffle plate made of 3.00 mm. shall be provided inside the tank this plate shall be properly welded with the two Angle in plus position touching major axis and minor axis peak points. The height of the baffle plate shall be just half of the minor axis of the tank.

11. Manhole:--

One manhole with hinged cover shall be provided at the top of the tank . The cover of the tank shall be fabricated by 3.00 mm thick MS sheet. The collar of the cover and manhole shale be made out of 3.00 mm. MS sheet. Locking arrangement for cover shall also be provided.

The shell of the tank shall be rested on the chassis by means of six number of guide made out of 100 x 50 (ISMC) channel section.

12. Pump set stand :--

Pump Set Stand shall be made of 150 x 75 mm. (ISM C) channel or Auto channel suitable for pumps.

10 General requirements of all types of Tanker:--

5. Outlet

Outlet 63 mm. NB class "A" GI nipple of 1 cm length (minimum) be provided at the rear of the tank along with required 75 mm cast Iron/steel ball valve.

6. Painting & Finishing

Tank to be painted with primer, enamel paint, inner side of tank to be painted with approved EPI coating suitable for drinking water storage tank.

7. Guarantee

The manufacturer shall furnish guarantee for one year against manufacturing defects, leakage etc., along with tender incorporating that in case of complaint they shall undertake satisfactory repair within 10 days free of cost.

8. Inspection

The inspection of water tanker shall be carried out by the inspection agency nominated by HPL authorized representative.

6. ± 5% Tolerance shall be provided to overall dimension of material as well as thickness of sheet & sections.

Note :-- If required minor deviation / amendment in specification may be done, after taking approval from Federation.

7. Necessary clearance From RTO to be obtained before supply of trailer & tanker.

Water Tanker mounted on Two wheel Tractor Trailer With 900 x16 tyre or 900 x 20 Capacity 5000 liter & 5500 liter.

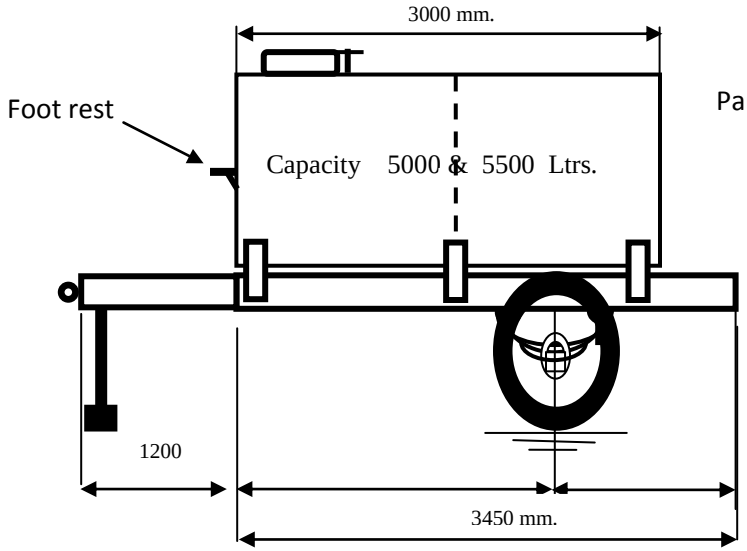

Front Elevation

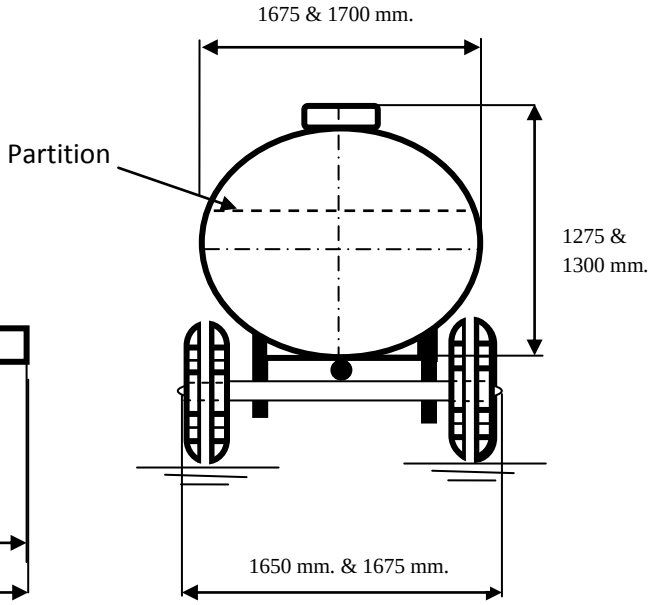

Side Elevation

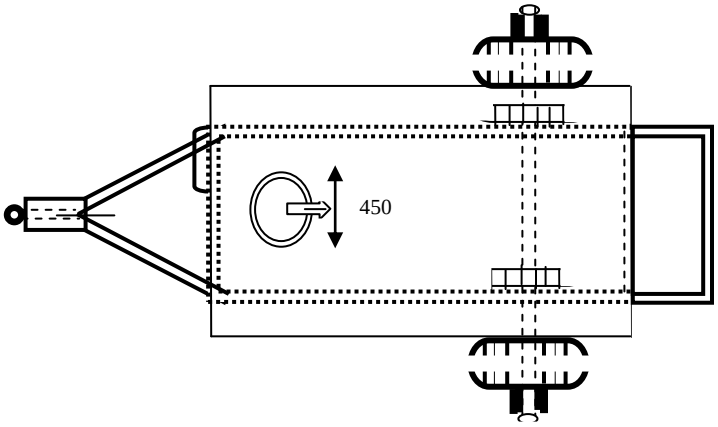

Top View

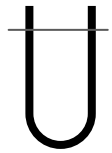

U BOLT 20 mm. DIA SIZE 583 mm x 75 mm x 583 mm.

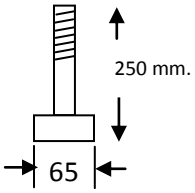

HEXAGONAL NUT & BOLT 250 x 65 mm.

1. WHEELS 900 x 16 or 900 x 20 2 NOS
2. WATER TANKER SHELL -- For 5000 Lit. 1675 x 1275x3000, For 3000, For 5500 lit. 1700 x 1300 x 3000 mm.
3. WATER TANKER SHEET 2.5 mm. thickness.
4. LAMINATED SPRING 70x10 1 SET 19 NOS. LEAVES, EYE TO EYE DISTANCE. -- 900 mm.
5. CHASSIS FRAME 150 x 75 mm. 1 SET 3450 x 780 mm.
6. AXLE SIZE 1 NO. 72 mm. x 1650 mm solid or 85 mm. square hollow
7. U BOLT SIZE 18 mm.7x3x7 Inch. 8 NO
8. DRAW BAR HOOK 40 mm. 1 NO
9. STEEL HUB 8 HOLE 2 NO
10. DOUBLE PLATED RIM 5mm. 2 NO
11. BEARING 32213 & 32216 NO. 2 SET

(changes to be incorporated if steel section upgraded)

1. UNLOADED WEIGHT 850 Kg & 900 Kg.
2. LOADED WEIGHT 5000 & 5500 kg
3. SPRING CAPACITY 6500 kg
4. Capacity 5000 Litr. & 5500 Lit

WATER TANKER MOUNTED ON TWO WHEEL AGRICULTURE TRACTOR TRAILER capacity 5000 Lit. WITH 9.00X16 & 9.00X20 NEW TYRE AND TUBE with fire Fighting Pump

1. **Chassis:**
   The chassis shall be fabricated as per standard practice to mount the M.S. Tank. All the joint shall be welded properly as per standard practice.

   The chassis frame have two longitudinal members having 150 x 75 mm. (ISMC) channel section or Auto channel and 3 cross member of the channel having 100 x 50 mm. (ISMC).

   The overall approximate dimensions of various tanker trolley chassis shall be as under :--

S. No.	Approximate Capacity	Length	Width
1.	5000 Liter.	3450 mm.	780 mm.

2. **Draw Bar (Chassis) :**
   Draw Bar shall be centrally fitted in Box or Triangular v shape welded together made out of MS channel of size 150 x 75 mm. (ISMC) channel section or Auto channel with eye hook made out of 40 mm. diameter MS bar.

3. **Axle Assembly :**
   Axle shall be made from 72 x 72 mm. x 1650 mm. square bar or 85 mm. square Hollow section with both the end machined and threaded and provided with iron hubs and hexagonal lock nut, fitted with twin taper roller bearing and provided with grease nipples for greasing the moving parts.

4. **Leaf Spring :**
   Two set of leaf spring consisting of 19 leaves of size 70 x 10 mm. minimum 900 mm. long (distance between two pin) of alloy steel shall be provided. These leaf spring shall be fixed with frame by means of complete cast iron bracket assembly.

5. **Tyre Tubes & Wheel Assembly :**
   Two number of New tyres of 9.00 x 20 and 9.00 x 16 with tube & flap assembly of slandered make (MRF, Ceat, Herculas, JK, Apolo, Birla, Modi, Michigan, Goodyear, Bridgestone etc) shall be provided with double plated rim 5 mm. thick with 8 No. of holes.

6. **Shell of the Water Tanker :--**
   The water tanker should have capacity of 5000 lit. and 5500 liters approximate manufactured in semi elliptical shape. The tank shall be made out of 2.50 mm. thick MS sheet, and maximum number of plates are not more than 4 No., End plates of the tank shall be made of 3.00 mm thick MS sheet with maximum in two No. plate.

S. No.	Approximate Capacity	Major Axis	Minor Axis	Length
1.	5000 Liter.	1675 mm.	1275 mm.	3000 mm.

The tank shall be reinforced from inside on end plates by two angle iron section 25 x 25 x 3 (ISA) in the Plus shape.

One baffle plate made of 3.00 mm. shall be provided inside the tank this plate shall be properly welded with the two Angle in plus position touching major axis and minor axis peak points. The height of the baffle plate shall be just half of the minor axis of the tank.

7. Manhole:--

One manhole with hinged cover shall be provided at the top of the tank . The cover of the tank shall be fabricated by 3.00 mm thick MS sheet. The collar of the cover and manhole shale be made out of 3.00 mm. MS sheet. Locking arrangement for cover shall also be provided.

The shell of the tank shall be rested on the chassis by means of six number of guide made out of 100 x 50 (ISMC) channel section.

8. Fire Fighter :--

Medium duty centrifugal pump (I.S.I. Mark) assembly is driven by pulley (Increased velocity ratio from 1 to 3) drive & connected with P.T.O. shaft of the tractor by means of propeller shaft & universal joint assembly.

Size range :-- 65 mm x 50 mm.

R.P.M. :-- 1400 to 1500

Req. H.P. :-- 12.5 H.P.

Out let of the pump is attached with 50 mm. cotton fabric delivery pipe followed with P.V.C./ G.M. Nozzle assembly. Inlet or suction pipe having 50/63 mm. diameter flexible green pipe followed 63 mm. PVC foot valve.

9. Stand for Delivery and suction Pipe :--

One stand shall be made for putting the delivery pipe on the top of the tanker by slandered means and provided hooks for hang the suction pipe.

11 General requirements of all types of Tanker:--

1. Outlet

Outlet 63 mm. NB class “A” GI nipple of 1 cm length (minimum) be provided at the rear of the tank along with required 75 mm cast Iron/steel ball valve.

2. Painting & Finishing

The tanker should be spray painted, with priming coat of red oxide and two coat of synthetic enamel paint and colour as desired by consignee. Interior of the tank should be painted with suitable primer followed by Non-poisonous rubber paint.

3. Guarantee

The manufacturer shall furnish guarantee for one year against manufacturing defects, leakage etc., along with tender incorporating that in case of complaint they shall undertake satisfactory repair within 10 days free of coat.

4. Inspection

The inspection of water tanker shall be carried out by the inspection agency nominated by Rajfed.

1. ± 5% Tolerance shall be provided to overall dimension of material as well as thickness of sheet & sections.

Note :-- If required minor deviation / amendment in specification may be done, after taking approval from Rajfed.

Water Tanker mounted on Two wheel Agriculture Tractor Trailer With 900 x16 & 900 x 20 tyre With Fire Fighter Pump, Capacity 5000 liter.

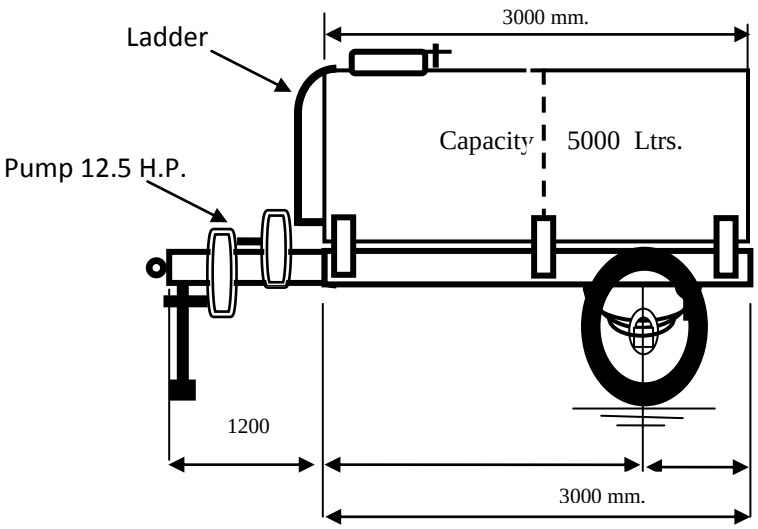

Front Elevation

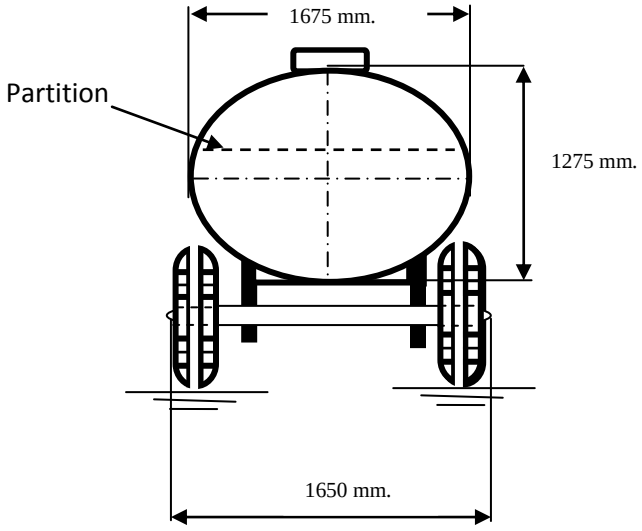

Side Elevation

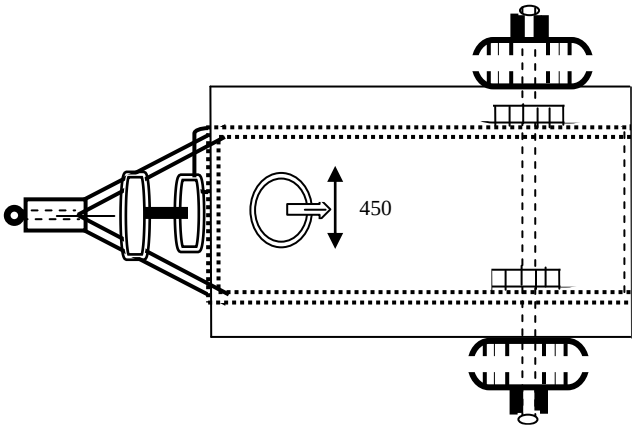

Top View

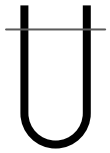

U BOLT 20 mm. DIA SIZE 583 mm x 75 mm x 583 mm.

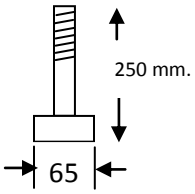

HEXAGONAL NUT & BOLT 250 x 65 mm.

1.	WHEELS 900 x 16 or 900 x 20	2 NOS
2.	Capacity	5000 Lit.
2.	WATER TANKER SHELL --	1675 x 1275 x 3000,
3.	WATER TANKER SHEET	2.5 mm. thickness.
4.	LAMINATED SPRING 70x10	1 SET 19 NOS. LEAVES, EYE TO EYE DISTANCE. -- 900 mm.
5.	CHASSIS FRAME 150 x 75 mm.	1 SET 3450 x 780 mm.
6.	AXLE SIZE	1 NO. 72 mm. x 1650 mm solid or 85 mm. square hollow
7.	U BOLT SIZE 18 mm.7x3x7 Inch.	8 NO
8.	DRAW BAR HOOK 40 mm.	1 NO
9.	STEEL HUB 8 HOLE	2 NO
10.	DOUBLE PLATED RIM 5mm.	2 NO
11.	BEARING 32213 & 32216 NO.	2 SET As per IS code 6403:1981 with the latest revision.
12.	Centrifugal Pump	12.5 H.P. centrifugal Pump , Size range 80 x 50 mm., RPM- 1400-1500.
13.	Suction & Delivery Pipe	Fire Nozzle with 25 ft. fabric pipe for outlet and 15 ft. long PVC suction pipe

Two Wheel Agriculture tractor Trailer with Hydraulic trolley capacity 7 ton.With 900 x 20 Tyres.

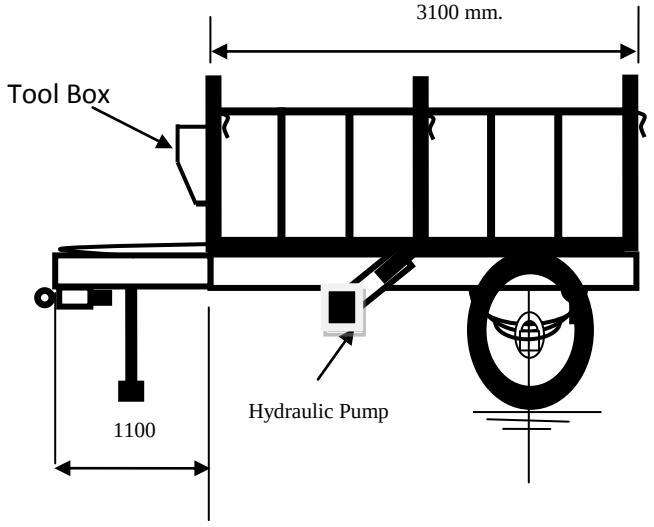

Front Elevation

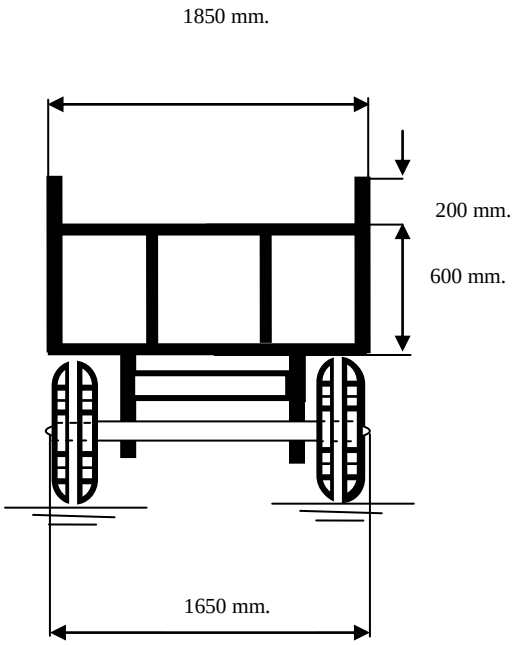

Side Elevation

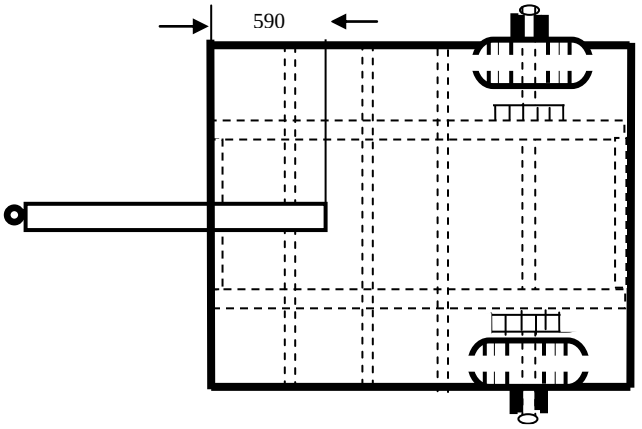

Top View

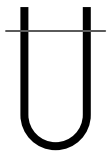

U BOLT 20 mm. DIA SIZE 583 mm x 75 mm x 583 mm.

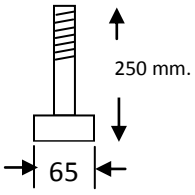

HEXAGONAL NUT & BOLT 250 x 65 mm.

1.	WHEELS 900 x 20	2 NOS	2.	FLOOR 10 x 6 ft. SHEET 4 mm. THICK	1 SET.
3.	SIDE BOARD 3.1x.6x1.85m 3 mm.Th.	1 SET	4.	LAMINATED SPRING 70x10	1 SET
19	NOS. LEAVES 900 mm. EYE TO EYE DISTANCE.		5.	CHASSIS FRAME 150 x 75 mm.	1 SET
6.	AXLE SIZE 72 x 1650 SOLID SQUARE or 80 mm . Hollow square		7.	U BOLT SIZE 18 mm.7x3x7 Inch.	8 NO
8.	DRAW BAR HOOK 40 mm.	1 NO	9.	STEEL HUB WITH 8 HOLE	2 NO
10.	DOUBLE PLATED RIM 5mm.	2 NO			
11.	BEARING 32213 & 32216 NO.	2 SET	As per IS code 6403:1981 with the latest revision.		

SPECIFICATIONS	1. UNLOADED WEIGHT	1250 Kg	2.	LOADED WEIGHT	7000 kg
3.	SPRING CAPACITY	9500 kg	4.	CAPACITY	3.4 Cu. m

Trailer Fixing of Self Adhesive Retro Reflective Marking Tape on Tractor Trolley As per CMVR 1989 and Automotive Indian Standard 112. 2012

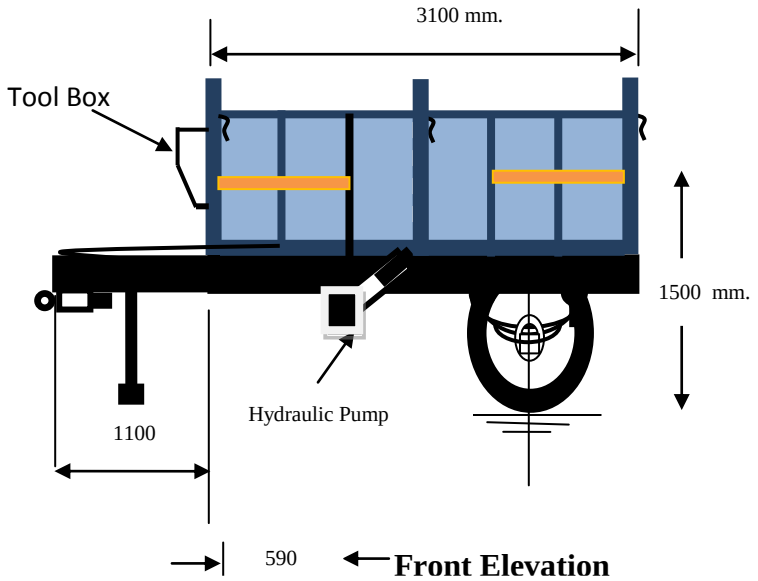

Front Elevation

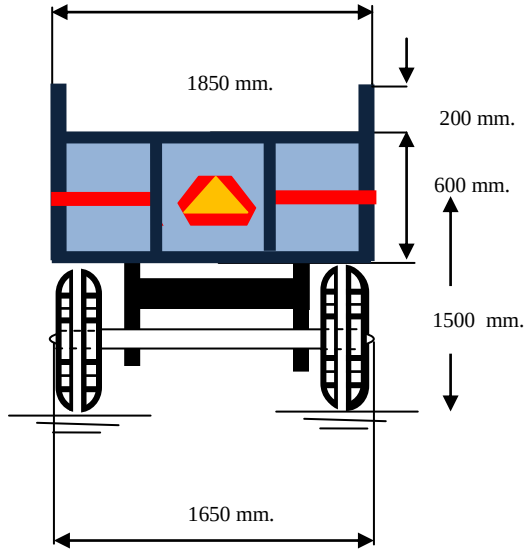

Side Elevation

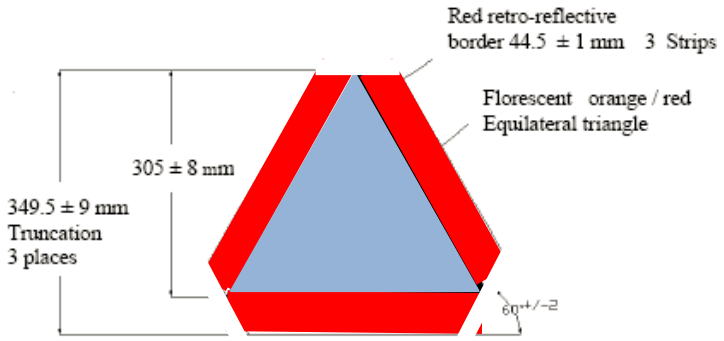

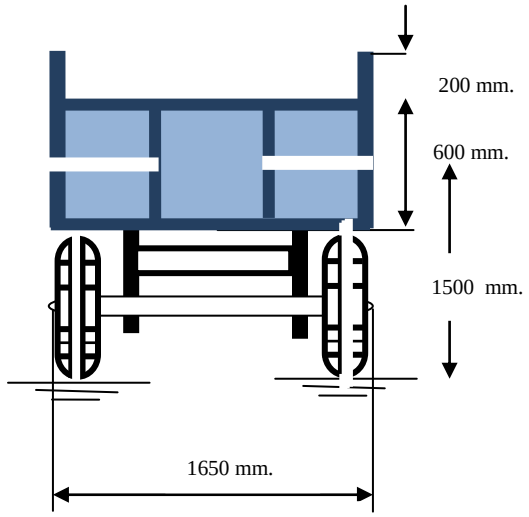

Front Elevation

Red Colour Retro reflective tape on the back side shall be affixed at the rear running across the width of body, covering at least 80% of width an length and having width not less then 50 mm. Height it shall be affixed at above the ground, not less than 250 mm nor more than 2100 mm.

Amber Colour Retro reflective tape on the both side shall be affixed running across the length of body, covering at least 80% of width and length and having width not less than 50 mm. Height it shall be affixed at above the ground, not less than 250 mm nor more than 2100 mm.

White Colour Retro reflective tape on the back side shall be affixed at the rear running across the width of body, covering at least 80% of width and length and having width not less than 50 mm. Height it shall be affixed at above the ground, not less than 250 mm nor more than 2100 mm.

Rear warning triangle : Red Retro reflective triangle As sper drawing shown affix on the rear side of the trailer/Trolley.

PRECAST CATTLE WATER TANK Capacity 1000 Lit. As per Dr.41		**DRAWING TITLE:** PRECAST CONCRETE TROUGH - CAPACITY 1000 Liter	**Drawn By:** T. ARMSTRONG **Date:** 19/11/08 **Revision:** A	

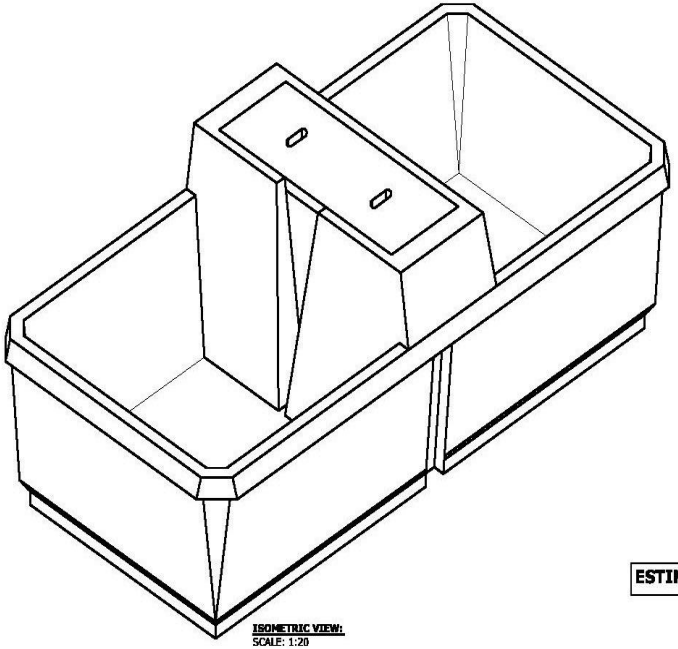

ISOMETRIC VIEW:
SCALE: 1:20

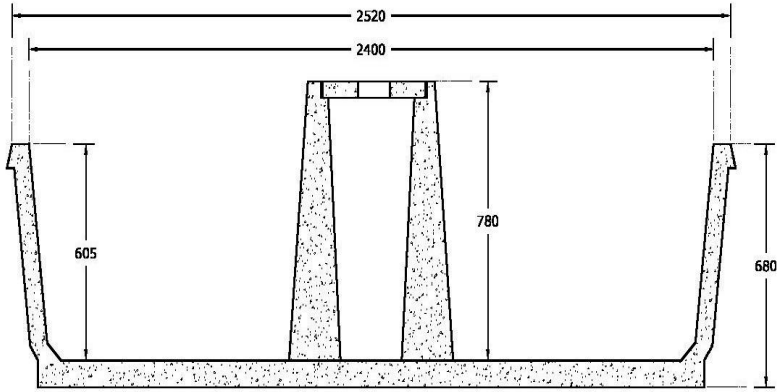

LONG SECTION:
SCALE: 1:15

ESTIMATED UNIT WEIGHT: 1.65 tonnes

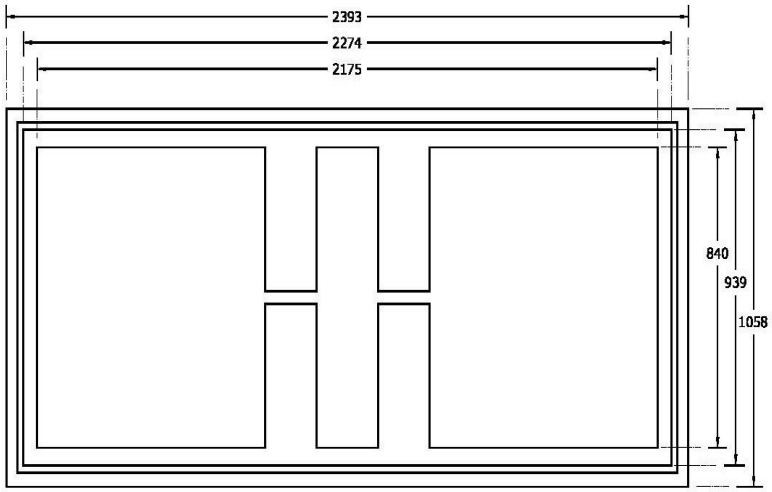

FLOOR PLAN:
SCALE: 1:15

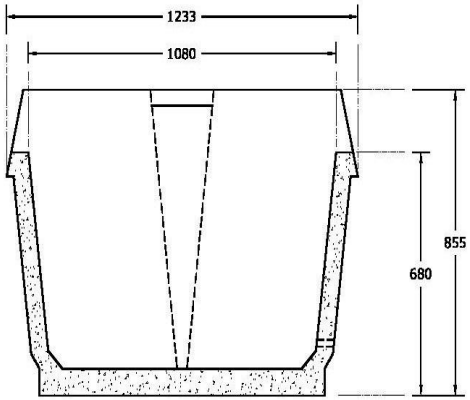

SHORT SECTION:
SCALE: 1:15

PRECAST CATTLE WATER TANK
CAPACITY 2000 Lit. As per Dr42

DRAWING TITLE:
PRECAST CONCRETE TROUGH
- CAPACITY 2000 liter

Drawn By: T. ARMSTRONG

Date: 26/01/09

Revision: 0

ESTIMATED UNIT WEIGHT: 2.25 tonnes

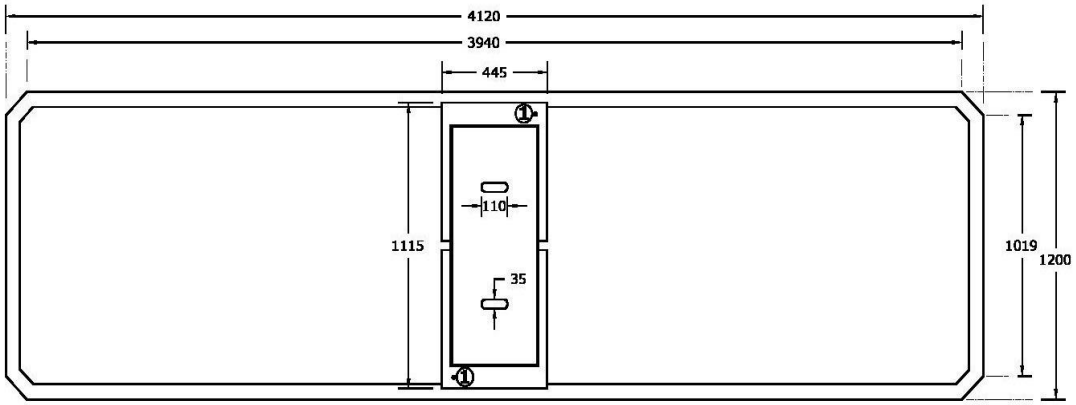

ROOF PLAN:
SCALE: 1:15

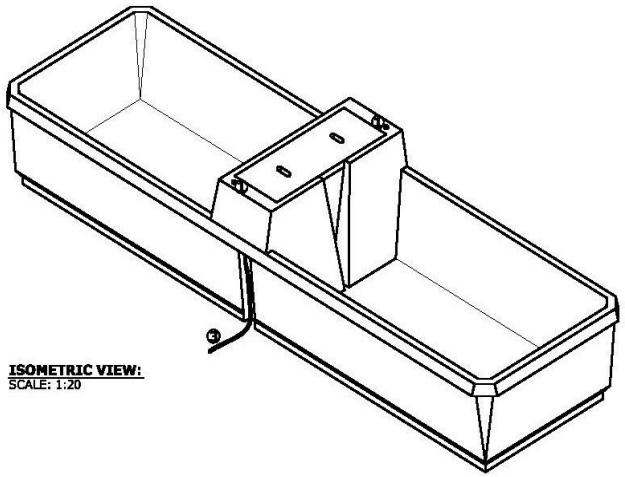

ISOMETRIC VIEW:
SCALE: 1:20

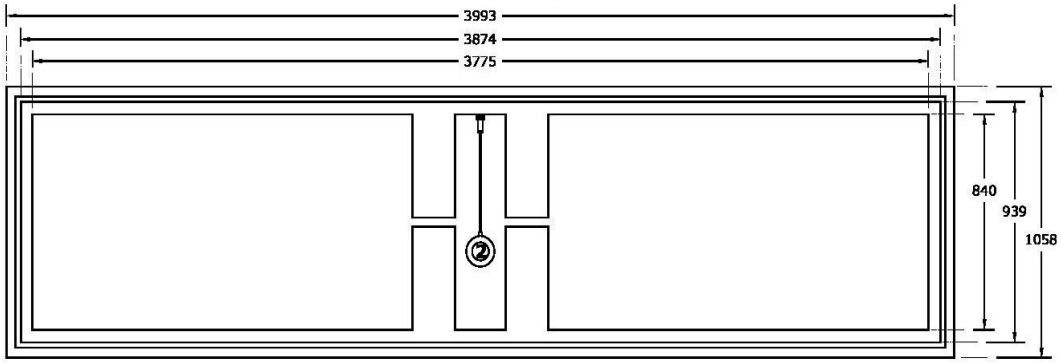

FLOOR PLAN:
SCALE: 1:15

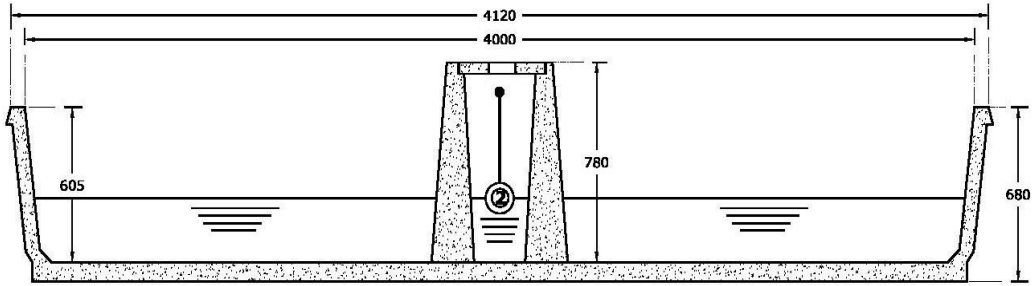

LONG SECTION:
SCALE: 1:15

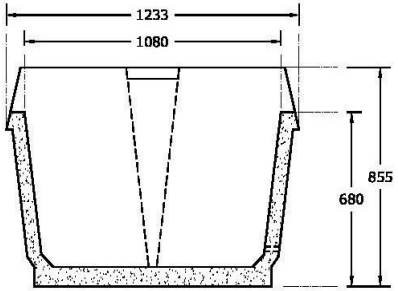

SHORT SECTION:
SCALE: 1:15

Water Tank Mounted on Two Wheel camel Cart capacity 1000 liter

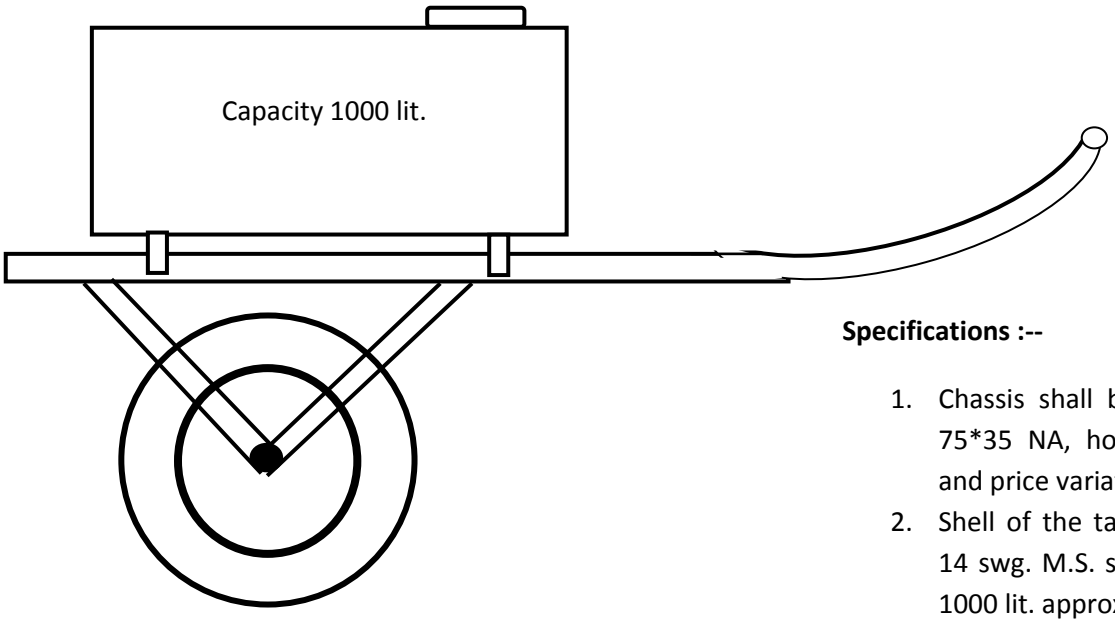

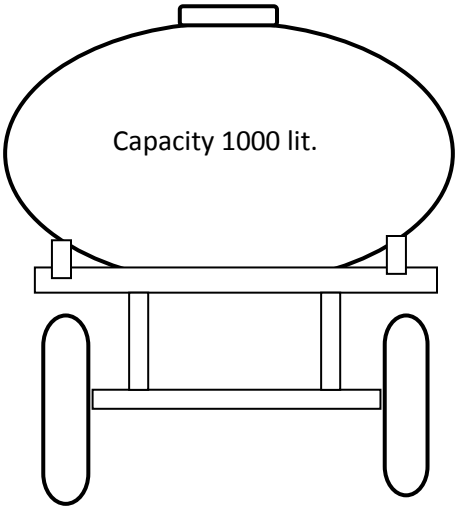

Specifications :--

1. Chassis shall be made of Channel 75*35 NA, hollow sec. 75*40 NA and price variation will be there.
2. Shell of the tank shall be made of 14 swg. M.S. sheet having capacity 1000 lit. approximately.
3. Wheel of the trolley shall be made of M.S. sheet, reinforcement with round M.S. Pipe. Surrounded by 50 x 10 mm. I.S.F. for hard surface /and for soft surface, suitable balloon / Radial tyre tube rim assembly shall be used according to the type of animal..
4. M.S. Axle shall be made of 40x40 mm. length 1650 mm. fitted with wheel by means of bearings.
5. Joodi shall be made of Babool having square shape approximate 100 x 100 mm. and 1650 length.
6. Suitable Two number of Tap shall be fixed on the back side of the

Drawing & Specifications of Animal operated Water Trolley

Operated by single/Double Animal (Bull/Camel) capacity 1000Lit.

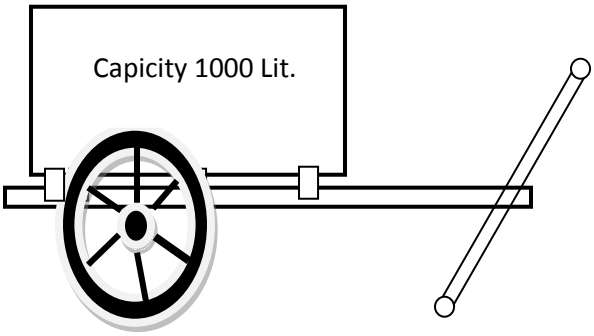

Front View

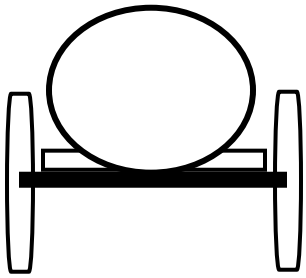

Side View

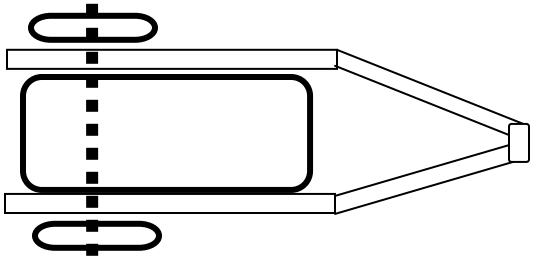

Top View

Specifications :--

7. Chassis shall me made of 75 x 35 mm. channel or 75 x 35 hollow section.
8. Shell of the tank shall be made of 14 swg. i.e. 1.6 mm. M.S. sheet having capacity 750 lit. approximately.
9. Wheel of the trolley shall be made of M.S. sheet, reinforcement with round M.S. Pipe. Surrounded by 50 x 10 mm. I.S.F. for hard surface /and for soft surface, suitable tyre i.e 500 x 19 and tube rim assembly shall be used according to the type of animal..
10. Axle shall be made of 40x40 mm. length 1650 mm. fitted with wheel by means of bearings.
11. Optional Joodi shall be made of Babool having square shape approximate 100 x 100 mm. and 1950 length.

Pure Pack Water Pasteurization System

Capacity :-- 5 Liter.

Cross section of Pure Pack

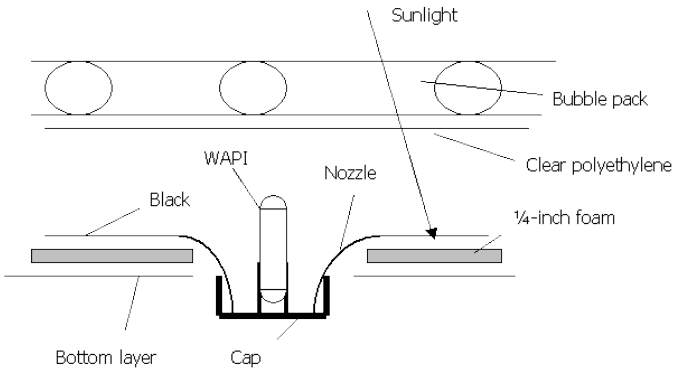

okih dSi foFk
oSDI

Technical Specifications

Capacity	: 2 liter to 5 liter.
Material	: Clear Plastic, Black Plastic.
	: plastic with air bubbles,
	: Filter cloth,
Cap	: Plastic Cap with Water Pasteurization Indicator Wax.
Ring	: Steel O ring for sealing of bags.

Terafil Domestic water Filter

Capacity 30 liter

purity :-- Turbidity up to 500 NTU and Iron up to 15 ppm shall be treated with this Terafil filter.

Domestic level filter : 30 liter with 1-4 LPH (liter per hour) rate of filtration.

The filter shall consist of a Terafil disc which is a porous sintered red clay disc and treats the raw water through filtration. It should not only removes turbid particles, microorganisms, iron, color & bad odor from raw water, but also improves the taste. The rate of filtration can be increased many folds by applying pressure.

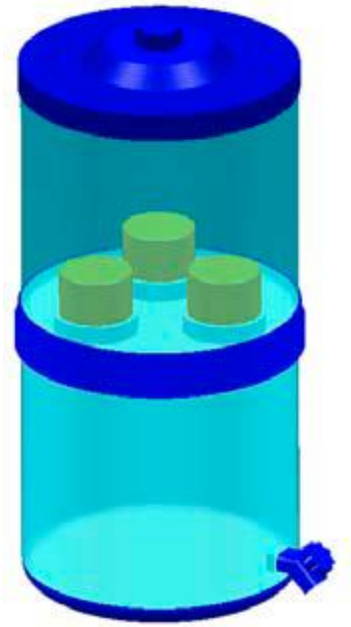

The Terafil water filtration disc shall be produced by mixture of red clay (ordinary pottery clay), river sand & wood saw dust without using any chemicals. Equipments like a pulveriser (Atta Chaki), a low cost coal/wood fired kiln, few hand tools and cement platform are required for mass production of Terafil water filtration disc.

Community water Filter (500 liter capacity) with Force Lift Pump

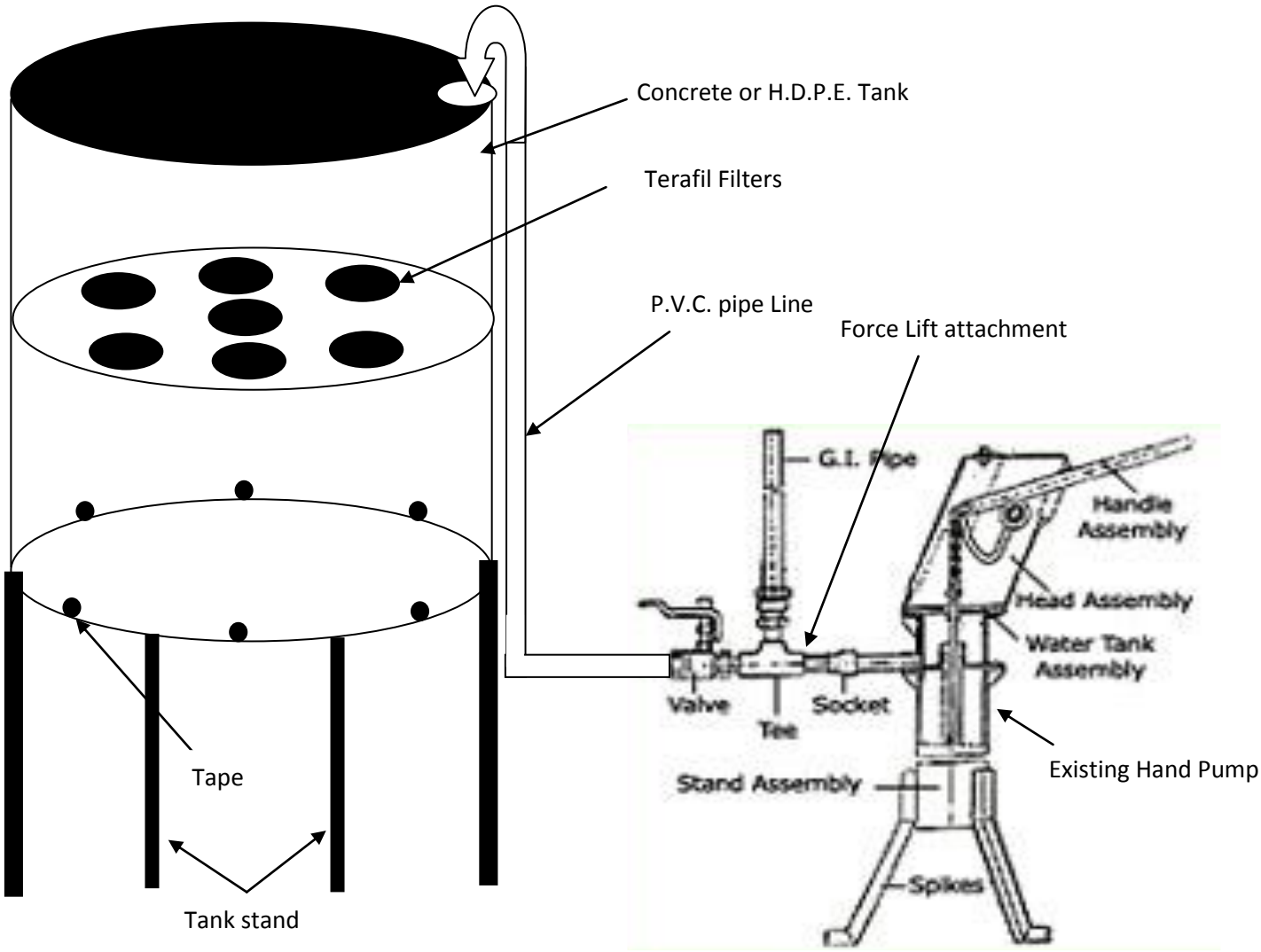

Specifications :--

1. Force lift attachment shall fitted with existing hand pump with PVC 20 mm. pipe line one end of pipe line is fiied with outlet of existing hand pump and another end fitted with inlet of tank.
2. Terafil water filter arrangement approved by CSIR (Govt. of India) shall be fitted in the middle of tank.
3. 500 liter HDPE/Precast water tank installed on the steel stand in case of HDPE tank and Concrete platform in case of Precast concrete tank.
4. 6 No. steel taps shall be fixed around the tank for drinking water.
5. One drain Valve shall be fitted in the middle of the tank for clean the terafil filter.

Three Wheeler Rickshaw Kooda Wahan

Specifications :--

1.	Wheel base	1680 mm.
2.	Tyre radius	350 mm.
3.	Over all Length	2350 mm.
4.	Overall Width	1350 mm.
5.	Chassis as well as body Weight	118 Kg.
6.	Gross Vehicle Weight (GVW)	318 Kg,
7.	Load capacity	20 CFT
8.	Mechanical Tipping facility	1 No.
9.	Front Wheel Tyre tube assembly	1 No. AIR
10.	Solid tyre based rear Wheel	2 No.
11.	Tubular frame of rickshaw	1 No.
12.	Mechanical Brake system on Rear Wheel	2 No.
13.	Leather sheet mounted on three heavy duty springs assembly	1No

14. Rickshaw shall be fitted with the accessories like chin guard, sheet cover,horn& lock.
15. Garbage Bin of MS sheet of 16 gauge thickness, strengthened by MS frame.
16. Chassis shall be painted with 2 coats of red oxide primer and 2 coats of black enamel paint.
17. The inside surface of the container shall be painted with 2 coats of red oxide primer & 1 coat of black enamel paint& 2 coats of rubber paint.
18. The outside surface of container shall painted with 1 coat of red oxide primer & 2 coats of enamel paint in different colour shed(green, yellow, orange& black).
19. Name of owner/user to be written at the time & place of delivery on both side faces of rickshaw.
20. At the time of delivery it shall be tested on full load.

MOVABLE TOILET UNIT, 8 SEATER MOUNTED ON FOUR WHEELS (TRACTOR OPERATED) WITH 7.50 x 16 TYRE AND TUBE.

1. **Chassis:**

The chassis shall be fabricated as per standard practice to mount the super structure of toilet unit. All the joint shall be welded properly as per standard practice.

The chassis frame have two longitudinal members having 150 x 75 mm. (ISMC) channel section and 2 cross member of the channel having 100 x 50 mm. (ISMC) and 2 cross member having 150 x 75 mm. (ISMC) channel section.

The overall approximate dimensions of various tanker trolley chassis shall be as under :--

S. No.	Capacity	Length	Width
1.	8 Seater	3400 mm.	1090 mm.

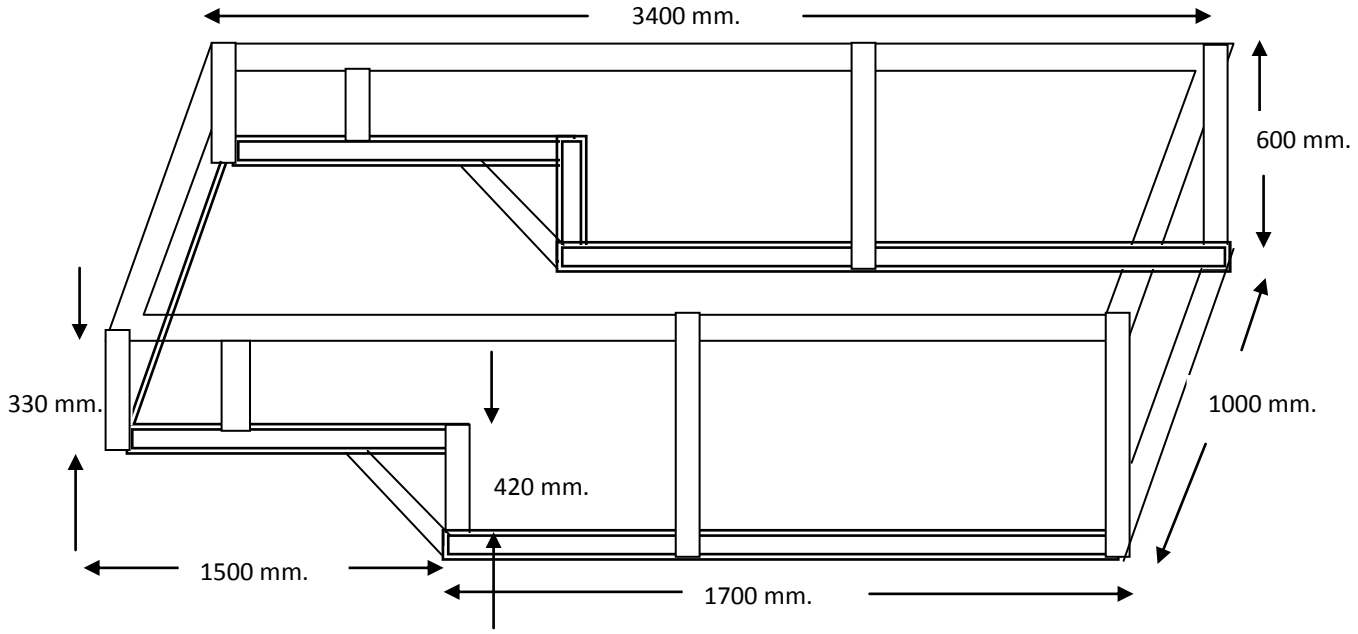

2. **Draw Bar :**

Draw Bar shall be fitted in V shape made out of MS channel of size 100 x 50 mm length 1250 mm. with eye hook made out of 40 mm. diameter Ms bar. Turning table shall be made of 100 x 50 mm. Frame and turning arrangement shall be made of 12 mm. solid round plate having diameter 560 mm. centrally pivoted by round pin allow to rotate whole structure. Draw bar is attached with turning table arrangement with MS rod having diameter 25 mm. of standard length.

DRAWING OF DRAW BAR WITH TURNING TABLE

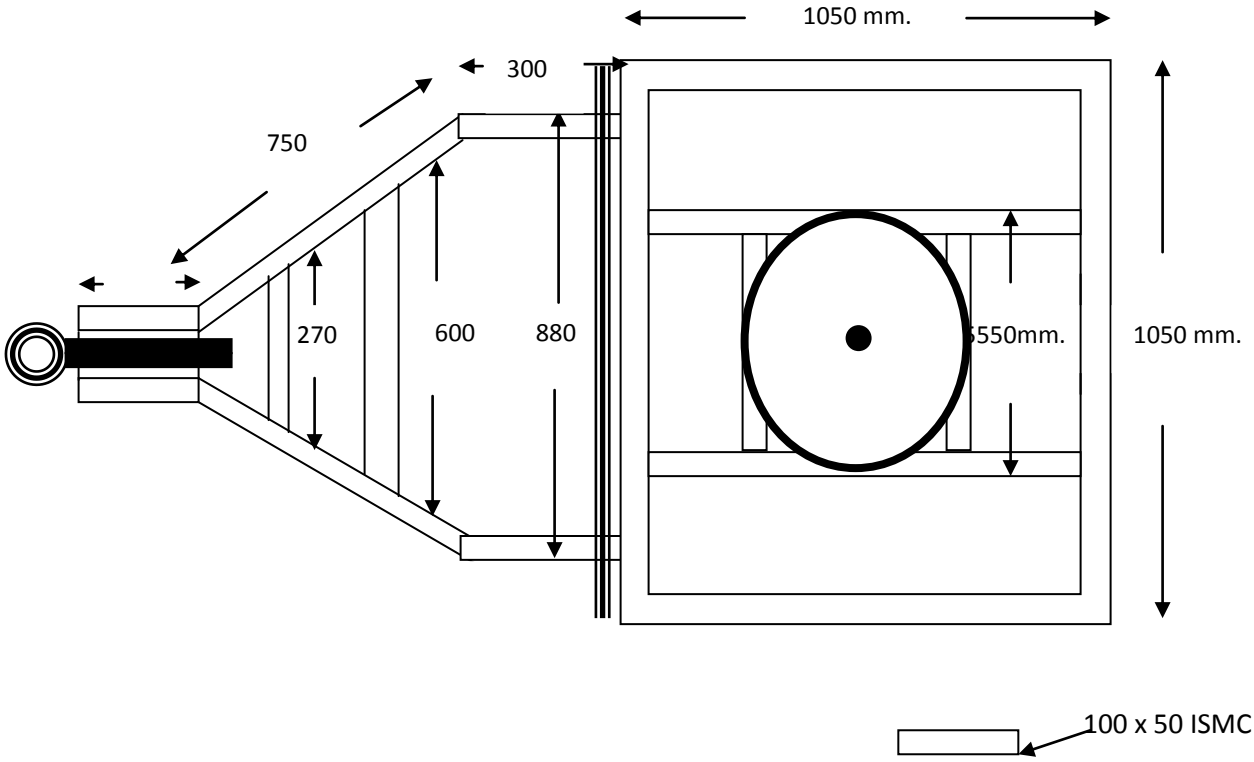

3. Axle Assembly :

Axle shall be made from 62 x 62 mm. square bar with both the end machined and threaded and provided with iron hubs and hexagonal lock nut, fitted with twin taper roller bearing and provided with grease nipples for greasing the moving parts.

4. Leaf Spring :

Four set of leaf spring consisting of 15 leaves of size 70 x 10 mm. minimum 900 mm. long (distance between two pin) of alloy steel shall be provided. These leaf spring shall be fixed with frame by means of complete cast iron bracket assembly.

5. Tyre Tubes & Wheel Assembly :

Two number of tyres of 7.50 x 16 with tube & flap assembly of slandered make (MRF, Ceat, Herculas, JK, Apolo, Birla, Modi, Michigan, Goodyear, Bridgestone etc) shall be provided with double plated rim 5 mm. thick with 8 No. of holes.

5. Super structure of Toilet Unit :--

The super structure of the toilet unit shall be made of combination of Angle iron frame and hollow square MS tube structure.

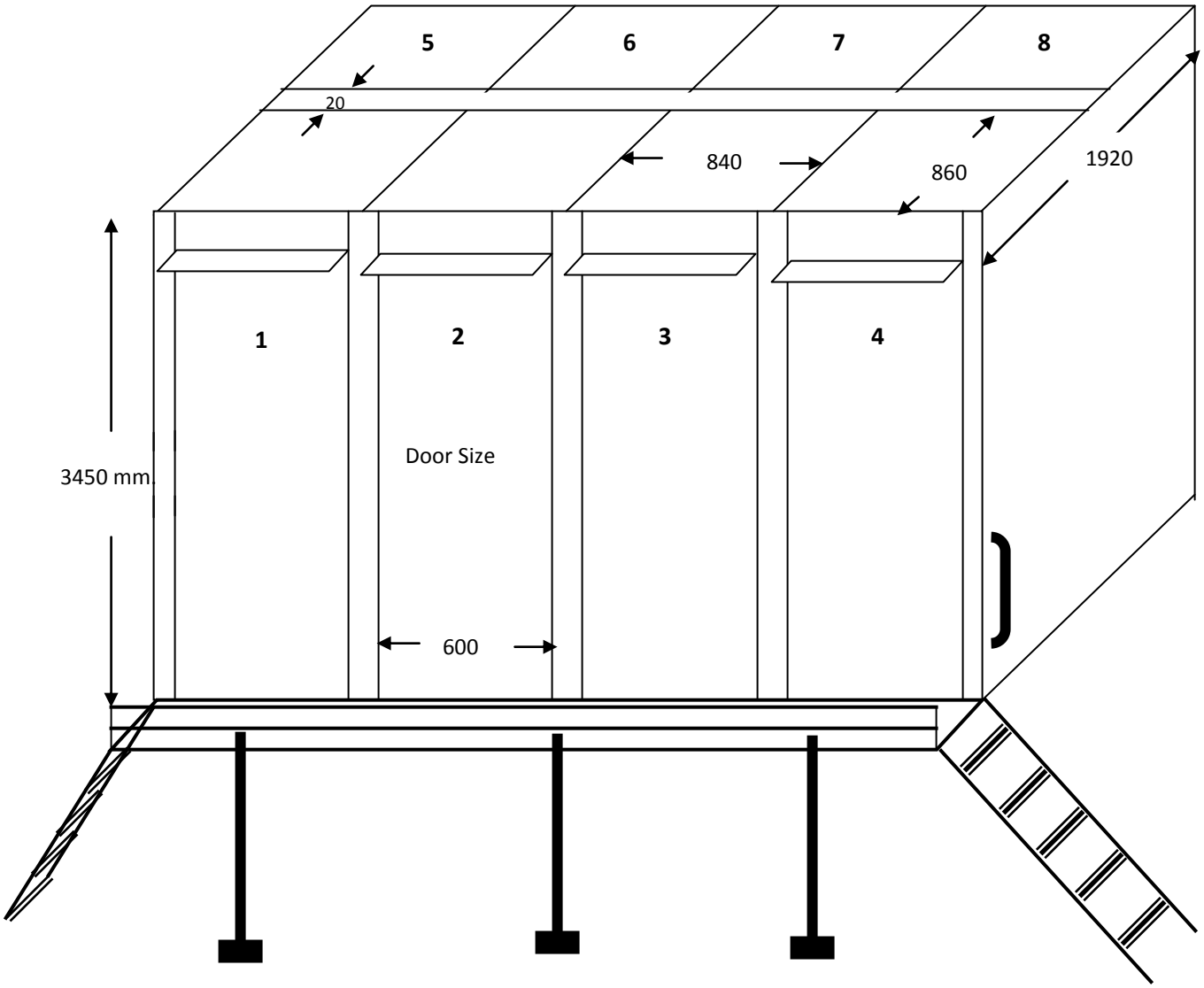

Superstructure of the unit shall be made of 22 SWG G.I. sheet riveted together fixed in steel angle section by means of steel rivets.

Frame of the superstructure shall be made of Angle Iron section & hollow square pipe welded together firmly by standard practice.

8 No. Toilet seats & plate form shall be made of Ceramic/Asbestos fiber sheet suitable for one person Size 840 mm x 860 mm duly fixed over Angle frame. The outlet of the toilet sheet shall be fixed with septic tank by means of air tight asbestos fiber with 30/45 degree angle.

Two no. of standing plateform shall be made of ISA 25 x 25 x 3, ISA 35 x 35 x 3 and pipes and fitted on the entrance of the toilets followed by ladder on both side for climb up. Three support of vertical Angle with adjustable arrangement shall be fitted to provide support of plate form.

5. Septic Tanker & Water Tank Arrangement:--

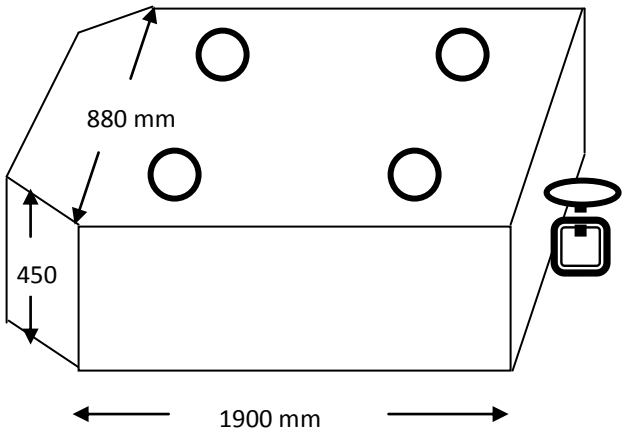

Septic Tank :--

1. Septic tank shall be made of 3.00 mm thick MS sheet dully welded together by welding as per standard practice.
2. Inner portion of the tank shall be either coating of asbestos fiber resin or heavy duty rubber paint to avoid rusting & corrosion.
3. one no. gate valve is fitted on the side of the tank to drain out water from tank, tank shall be fitted slightly in inclined to easily release waste water .
4. Four no of inlet connection on the top of the tank from toilet sheet, rest four connection shall be made by means of separate pipe connection.

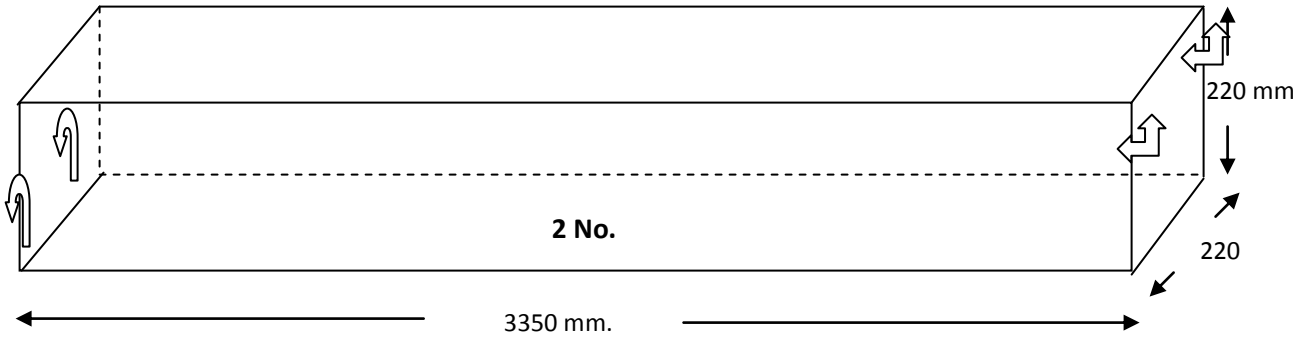

Water Tank :--

Water tank of the toilet unit shall be made of 12 Swg. (2.5 mm. thick) sheet dully welded together as per standard practice followed by two coat inner & outer enamel coating to protect against corrosion.

Two inlet GI nipple and socket shall be provided for filling tank and two blow off cock shall be provided fordrinking water as per requirement.

8. General requirements of all types of Tanker:--

1. **Painting & Finishing** The tanker should be spray painted, with priming coat of red oxide and two coat of synthetic enamel paint and colour as desired by consignee. Interior of the tank should be painted with suitable primer followed by Non-poisonous rubber paint.

2. **Guarantee** The manufacturer shall furnish guarantee for one year against manufacturing defects, leakage etc., along with tender incorporating that in case of complaint they shall undertake satisfactory repair within 10 days free of coat.

3. **Inspection** The inspection of water tanker shall be carried out by the inspection agency nominated by Federation.

4. ± 5% Tolerance shall be provided to overall dimension of material as well as thickness of sheet & sections.

PRECAST FERROCEMENT TOILET

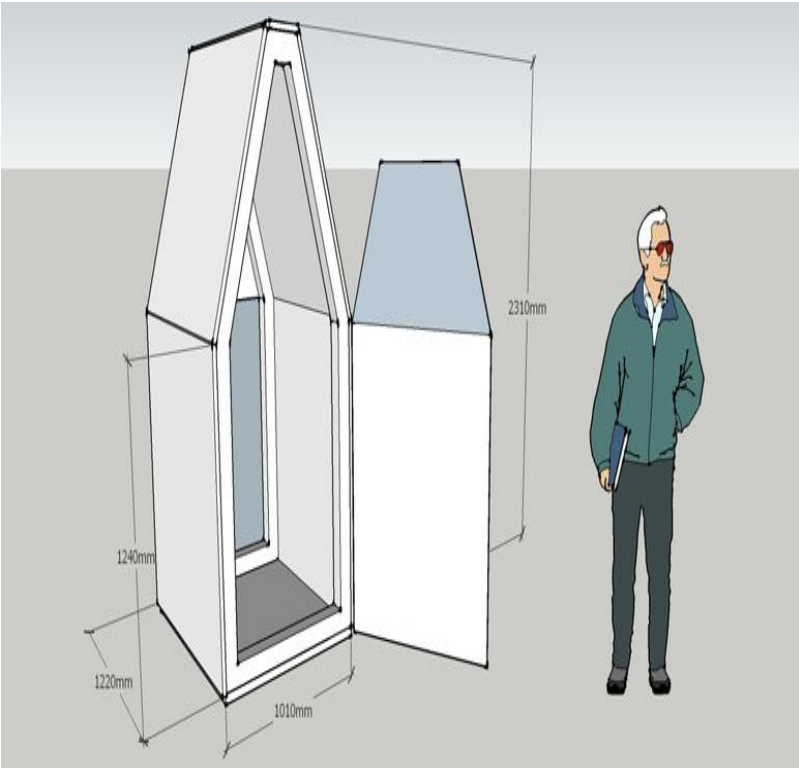

SPECIFICATION

- Overall dimensions: **Height:2310mm (7ft 6.8inches); Width: 1010mm (3ft 3.76inches); Depth: 1220mm (4ft)**
- Weight once assembled is 900 kgs
- Frame and Panels are manufactured from RCC using M-30 grade of Concrete
- Panels are reinforced with 4x50x50mm welded wire mesh.
- Door is manufactured from 12mm thick laminated cement particle board (BISON or equivalent)
- Side RCC panels are 25mm thick while the bottom panel is 40mm thick
- Suitable hinges are provided for the door to swivel
- A unique lock is provided to close the cabin when in use. The door lock is designed so that the same can be locked from inside or outside but never both.The cost of the lock is almost NIL therefore its theft is not a concern.
- All RCC components are reinforced suitably to promote long use and to prevent damage during handling & transportation

Drawing and Specifications of Precast Tree Guard

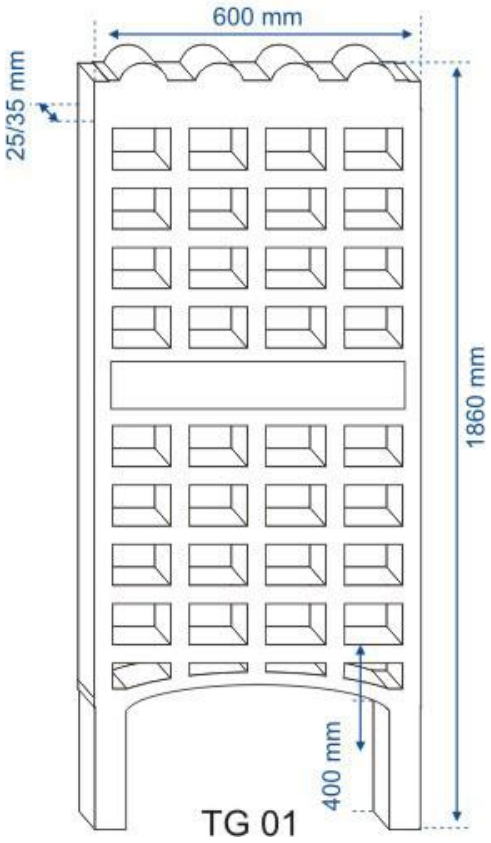

FEATURES & SPECIFICATION

- Consist of four panels of size 1860mm (Height) X 600mm (Width) X 25/35mm (thickness); Size of opening: 100mm X 100mm.
- Colour: Natural Gray, Grade of Concrete : M-30.
- Manufactured with M-30 grade of concrete using vibro-compaction process using joint less FRP moulds so as to achieve shuttering finish.
- Suitably reinforced to promote long use and to prevent damage during handling , transportation & erection.

Precast Concrete Dustbin

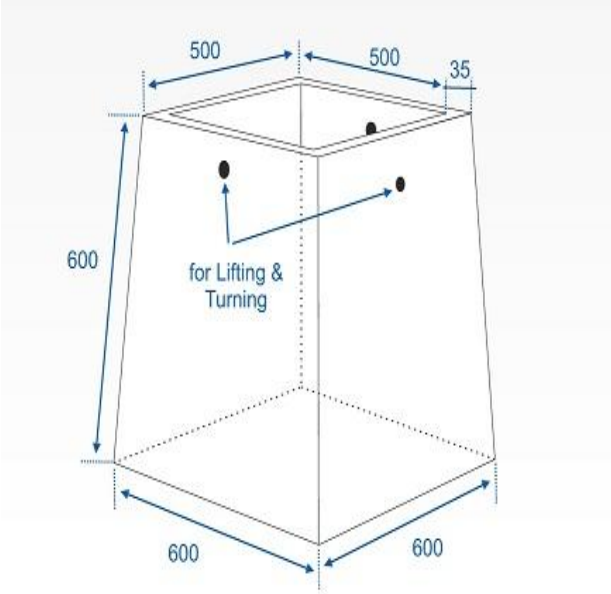

Features & Specification:

- Overall dimensions: Height:600 mm; Top Width: 500 mm; Top Breadth: 500mm
- All components are manufactured by using M-30 grade of Concrete using vibro-compaction process
- All components are reinforced suitably to promote long use and to prevent damage during handling, transportation
- Top and Bottom are open
- All four faces have dustbin logo

Prefabricated Hanging Dust Bin

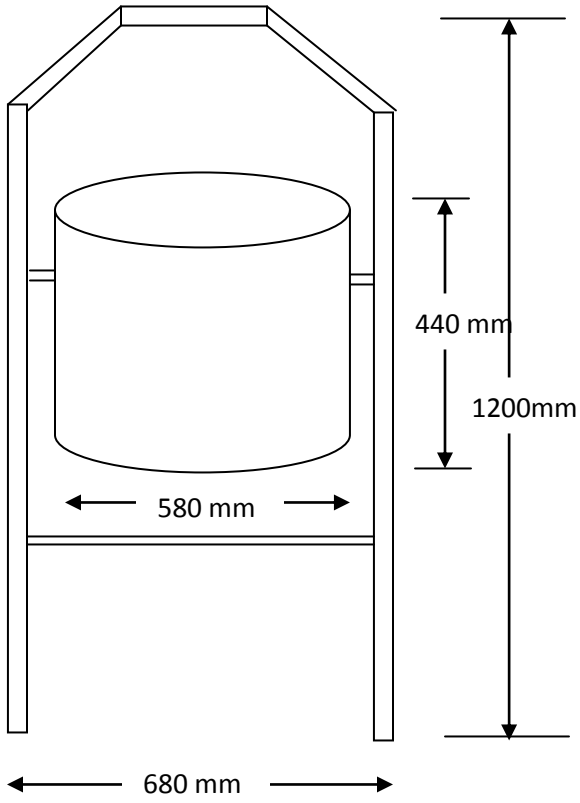

Overall dimensions, Hollow Pipe section 50 x 50 mm. Height: 1200 mm; Top Width: 680 mm; Top Breadth: 200mm.

M.S. drum having 1 mm. thickness size 580 mm. x 440 mm. pivoted on the hollow pipe structure.

Horizontal Bottom pipe having length 680 mm. dually fitted by welding having diameter 25mm.

Whole structure dually painted with ready made mix paint and transportation up to site.

Both Coloumn shall be grouted in the ground or dually supported by such a arrangement not to un balance from ground.

ANNEXURE- 4

TECHNICAL SPECIFICATION

Group 1- Garbage Handling Products

A - Garbage Container-

1-Capacity

Garbage container shall be of following capacities:

1. 1.0 cubic meter (covered type)
2. 1.0 cubic meter (open type)
3. 3.5 cubic meter
4. 4.5 cubic meter
5. 5.5 cubic meter

2- Dimensions:

Outer dimension of garbage container shall be as under:

S. No.	Capacity of Garbage container	Length	Width	Height
1	1 .0 cubic meter (covered type)	1575mm	800mm	1225mm
2	1 .0 cubic meter (open type)	1590mm	1380mm	1 060mm
3	3.5 cubic meter	2450 mm	1525mm	1220mm
4.	4.5 cubic meter	2590mm	1 5 1 Omm	1370mm
5.	5.5 cubic meter	2745mm	1510mm	1 525mm

3- Construction: Fabrication of Garbage Container shall be as per drawing. The major dimensions are mentioned in the drawing and where dimension are not mentioned, shall be assume as per standard practice. Outer dimensions mentioned above are approximate. The body of Garbage Container shall be made of M.S. The details of material are given as under

S. No.	Capacity of Garbage container	Bottom	Side& Gate	Cover & Rest	Frame & cover Angle	Chnnel MMC
1	1 .0 cubic meter (covered type)	3.00mm	2.50mm	2.00mm	35x35x5/4. 5mm	75/70x40/35 mm
2.	1.0 cubic meter (open type)	3.00mmm	3.00mm	—	—	—
3	3.5 cubic meter	4.00mm	3.00mm	1.60mm	40x40x5/4. 5mm	75/70x40/35 mm
4	4.5 cubic meter	4.00mm	3.00mm	2.00mm	40x40x5/4. 5mm	75/70x40/35 mm
5.	5.5 cubic meter	400mm	3.00mm	2.00mm	40x40x5/4. 5mm	75/70x40/35 mm

4- **Material:** Material used in Garbage Container such as MS plate, MS angle, MS channel etc. shall be of prime quality. The material shall be wrinkle free & rust free. In all types of Garbage Containers the bottom sheet shall be in two pieces max., the side plates shall be maximum in two pieces and top cover sheet shall be also be in two pieces max. The welding of side plates shall be, in side the vertical channels. The joints of side plates shall not appear from out side. Container of 1.0 cubic meter capacity open type shall

be manufactured from 3.00mm pressed steel sheet. All the corners, bends, ends shall be properly folded and pressed.

5- **Drain Holes**- 8 Nos. hole in 1.0 cubic mtr. Container and 12 holes in rest of containers, of size 25mm dia. shall be provided in bottom sheet.

6- **Locking Arrangement**: Appropriate locking arrangement & Tilting arrangement shall be as per standard practice. One no. tipping hook made of 25 mm dia MS bar duly welded to the side plates 10mm thick in 1.0 cubic mtr. container (covered type) and side plate 16mm thick in rest of containers shall be welded on bottom portion from outside near the door. This arrangement is not provided in 1.00 cubic meter Garbage container of open type.

7- **Painting**:- All the structural members and other body components of steel shall be thoroughly cleaned before painting. Two coats of Zinc chromate red-oxide shall be applied and then one coat of black enamel paint inside the container and yellow/green colour enamel paint on outer body shall be applied. The zinc chromate red-oxide and enamel paint shall be of Asian/Berger/Shalimar/Nerolac other equivalent make.

8- **Welding & Finishing**:-The welding shall be tag welding from inside and out side . The length of the welding tag shall be approx. 20-25 mm at 10.0cm (4") to 12.5cm (5") distance. Garbage Container shall be free form all welding defects and finish shall be smooth.

DRAWINGS OF GARBAGE CONTAINER

1- Garbage Container 1.0 cubic meter (covered type) indicative drawing
(All dimensions in mm)

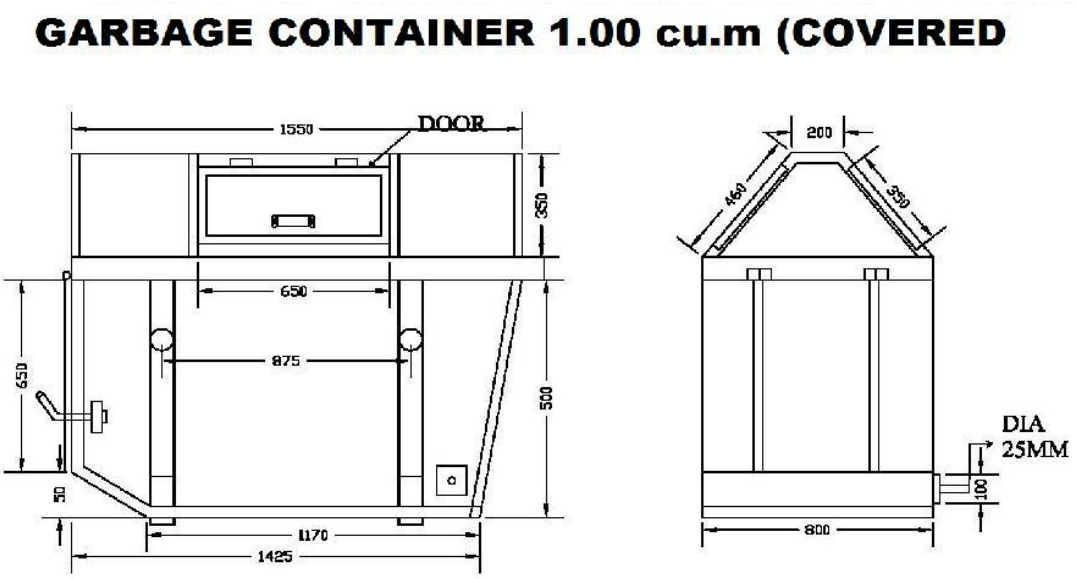

2- Garbage Container 1.0 cubic meter (open type) indicative drawing
(All dimensions in mm)

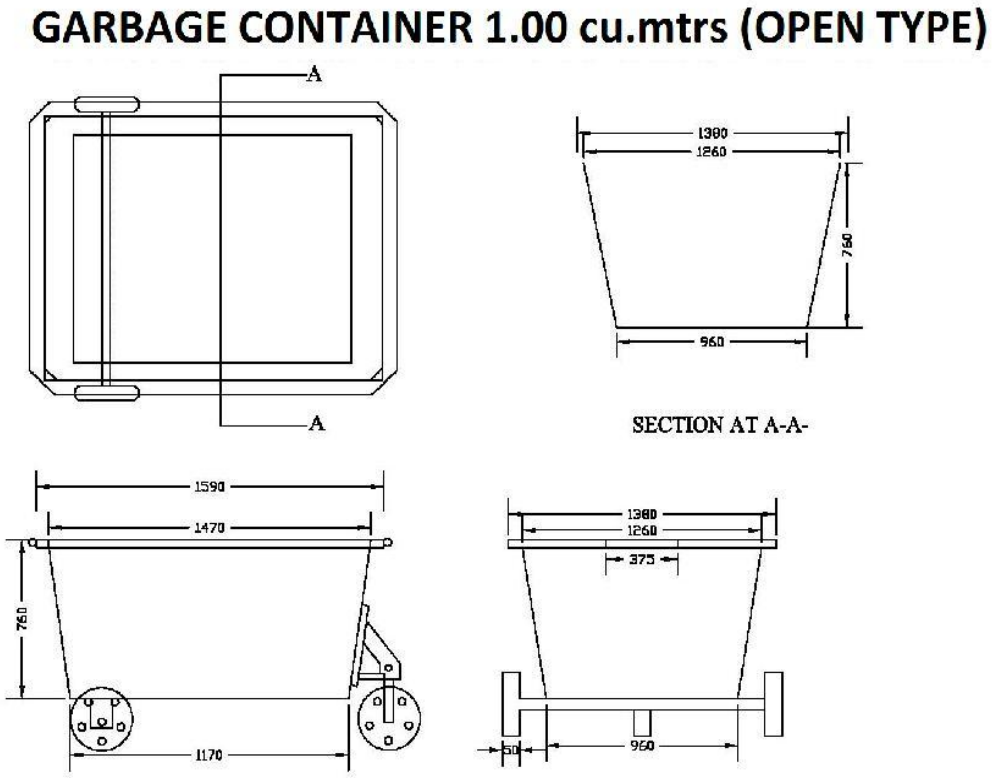

3- Garbage Container 3.5 cubic meter indicative drawing
(All dimensions in mm)

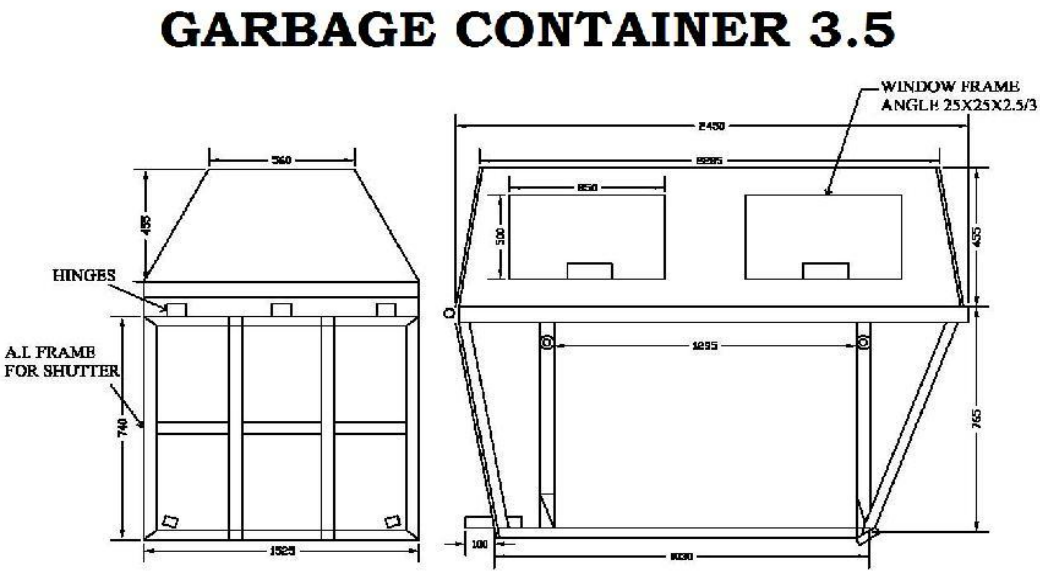

4- Garbage Container 4.5 cubic meter
(All dimensions in mm)

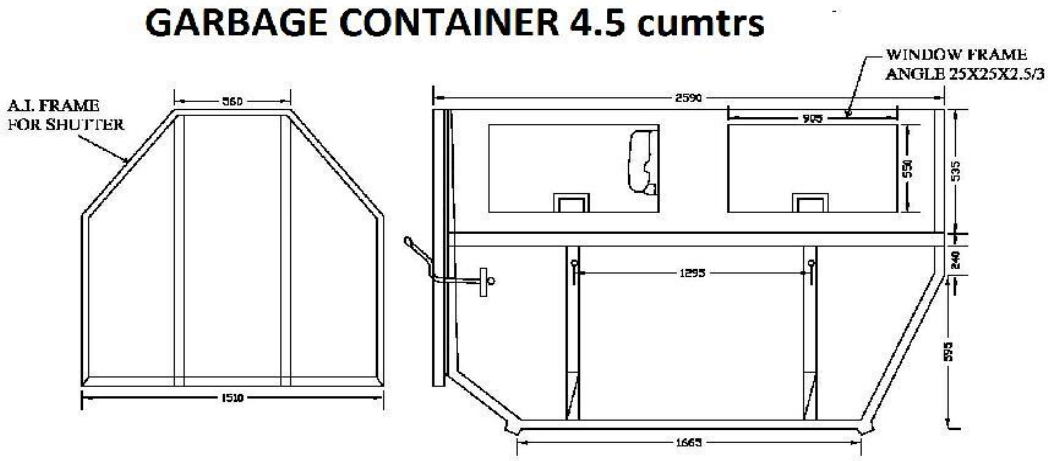

5- Garbage Container 5.5 cubic meter

(All dimensions in mm)

GARBAGE CONTAINER 5.5 cumtrs

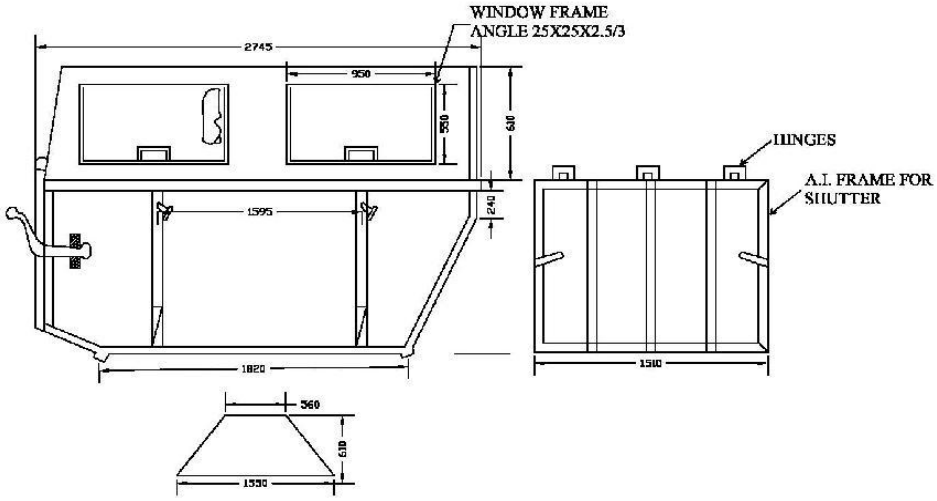

Prefabricated Steel structure For Indoor Gym

Group (38) 2

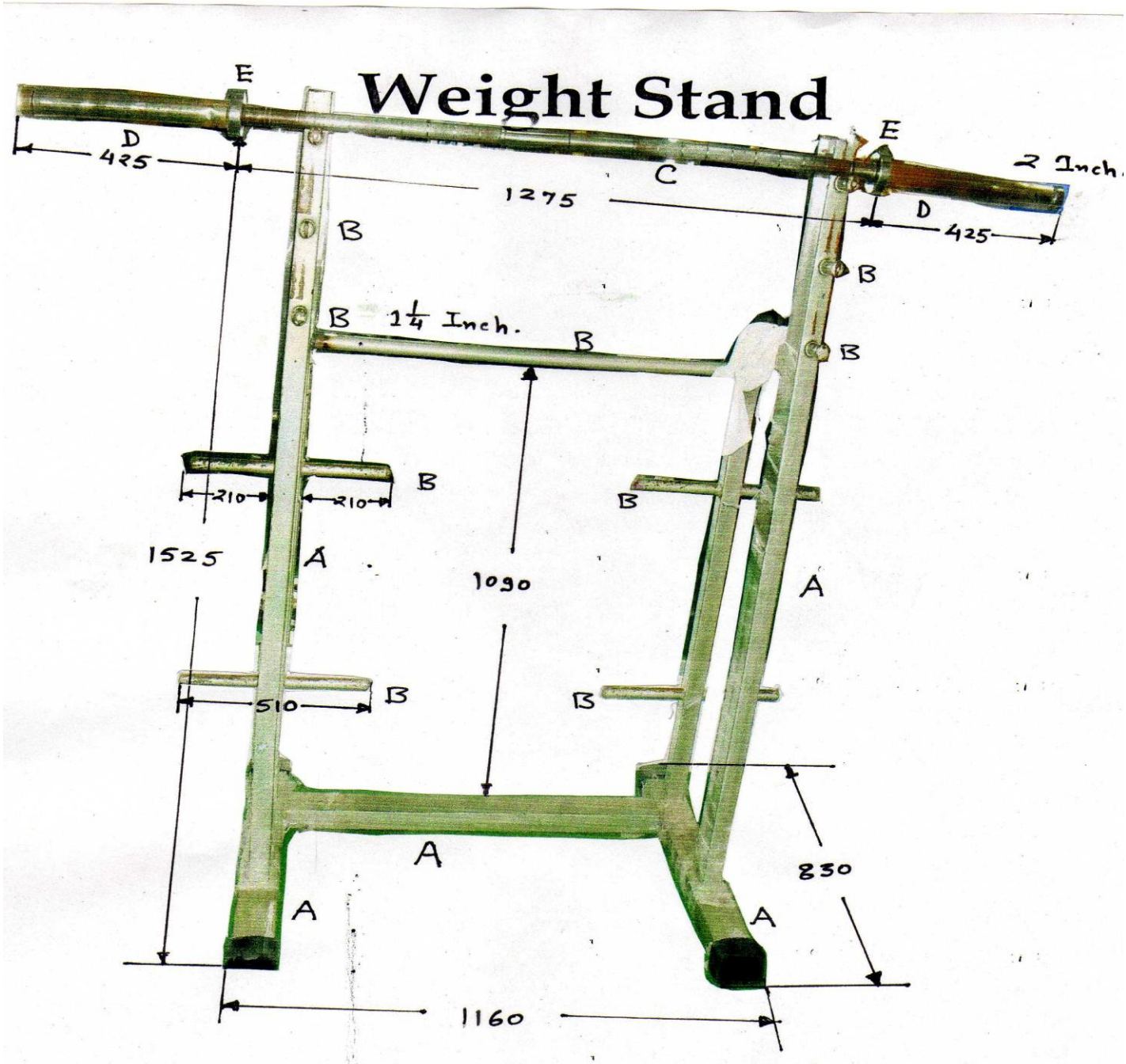

NOTE :- **All Dimensions in mm.**

A :-- Frame made of 95 x 44 mm. M.S. Rectangular Section.
B :-- Round M.S. Pipe having diameter 33 mm. used as a weight support.
C :-- Round M.S. Solid bar having diameter 33 mm. used for lifting weight.
D :-- Ends of the weight lifting rod having diam. 40mm revolve with bearing.
E :-- Stopper shall be made of 76 mm. dia. Bearing used for weight stopper..

---- All corners shall be fixed with rubber or p.v.c. brackets.
---- All sharp corners should be avoided & properly chamfered.
---- All gripping potion of the machine shall be properly knurling.
---- Bench shall be painted by two coat enamel paint over one coat of primer.

Bench & Shoulder Press

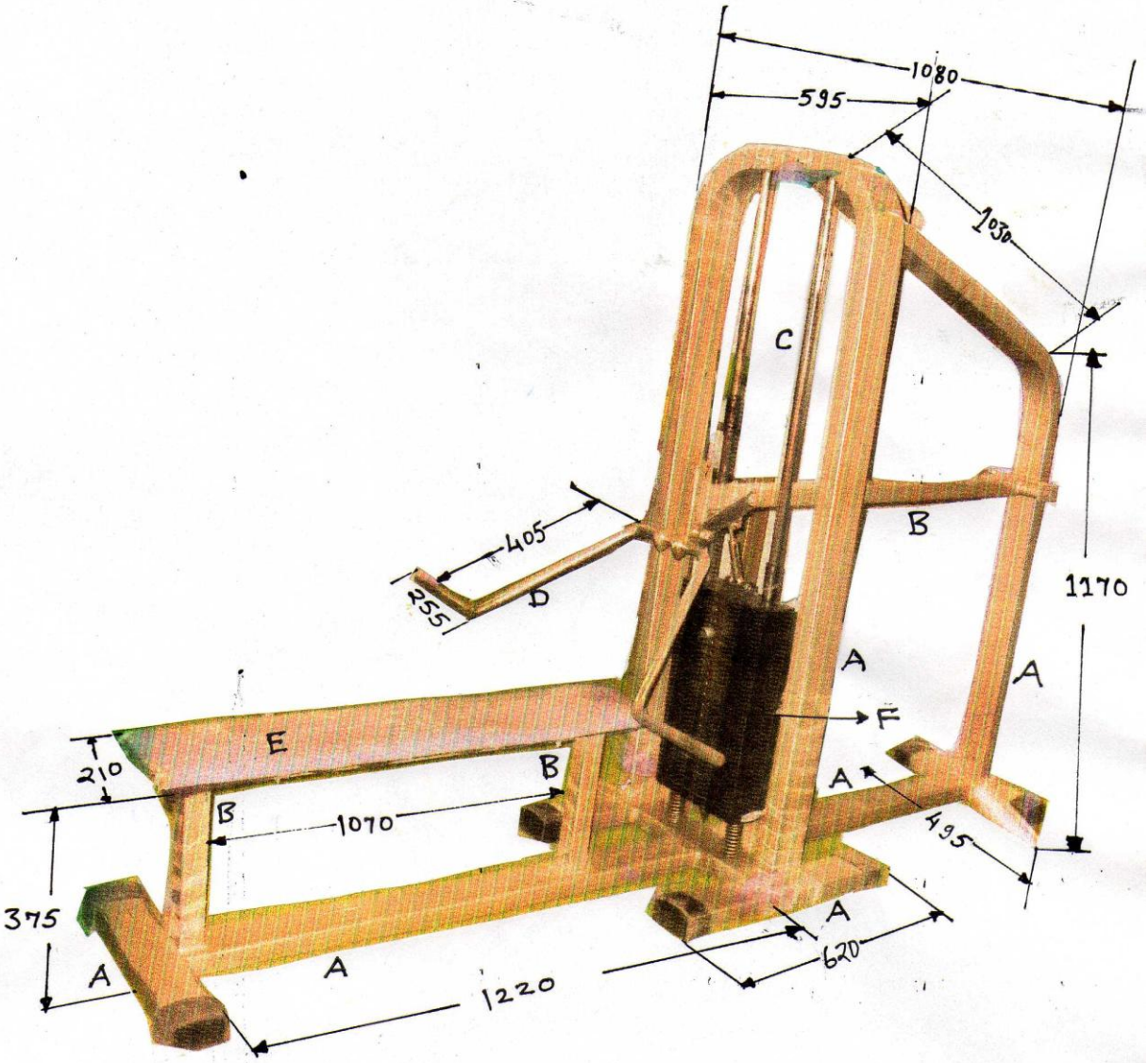

NOTE :- **All Dimensions in mm.**

A :-- Frame made of 95 x 44 mm. M.S. Rectangular Section.

B :-- Supporting frame made of 40 x 40 mm. Rectangular section.

C :-- Round M.S. Pipe having diameter 25 mm. used as a weight support.

D :-- Handle of the machine shall be made of 25 mm. solid polished round bar.

E :-- Bench cushion shall made of finish regzine over 20 mm. water proof ply.

F :-- Weight shall be made of p.v.c./cast Iron as per actual practice.

---- All corners shall be fixed with rubber or p.v.c. brackets.

---- All corners of the bench should be chamfered.

---- Bench shall be painted by two coat enamel paint over one coat of primer.

Roller Jogger

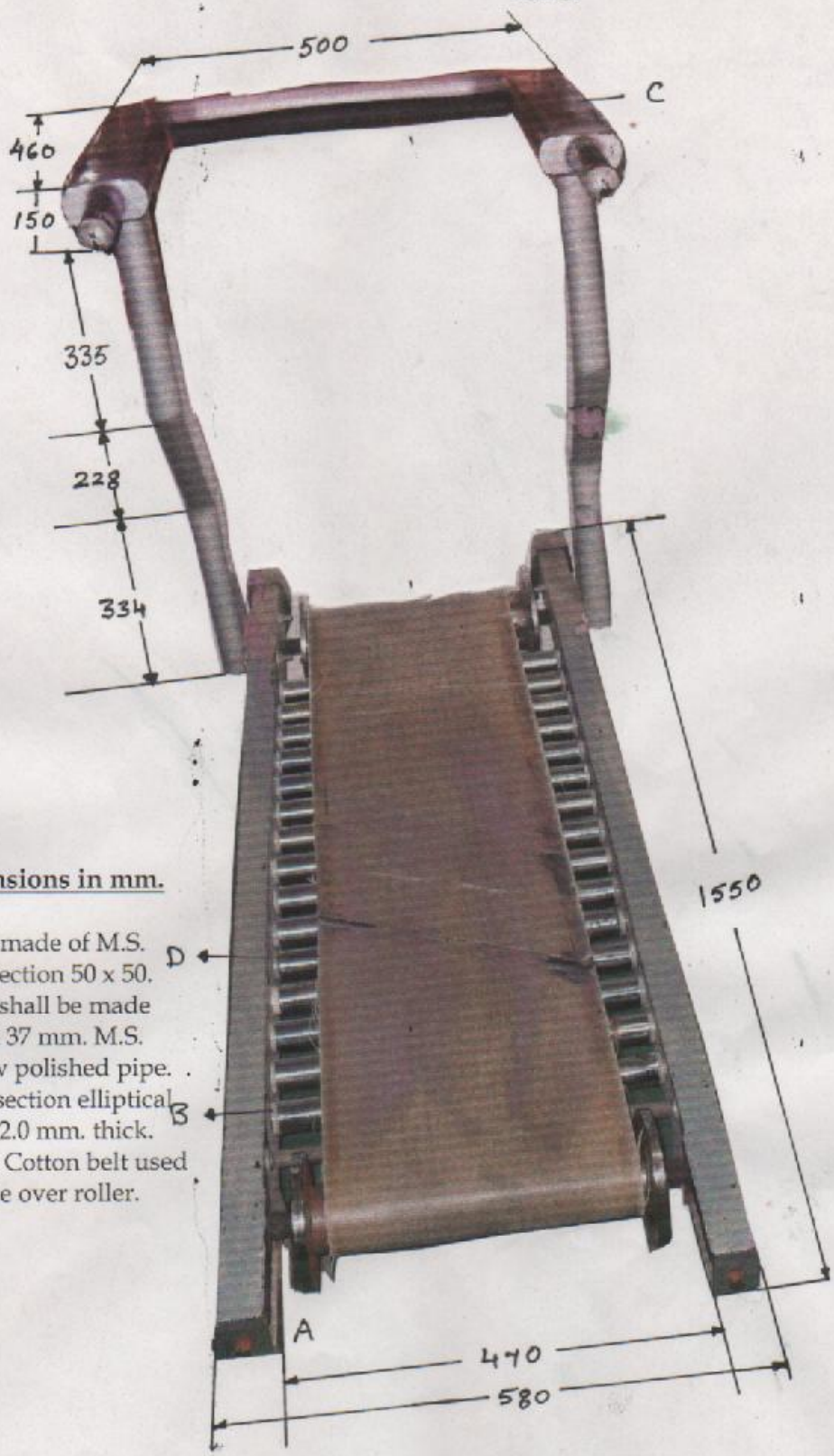

All Dimensions in mm.

A :-- Frame made of M.S. Rect. Section 50 x 50.

B :-- Roller shall be made Round 37 mm. M.S. Hollow polished pipe.

C :-- Sheet section elliptical Shape 2.0 mm. thick.

D :-- Fabric Cotton belt used to slide over roller.

Curved Bed

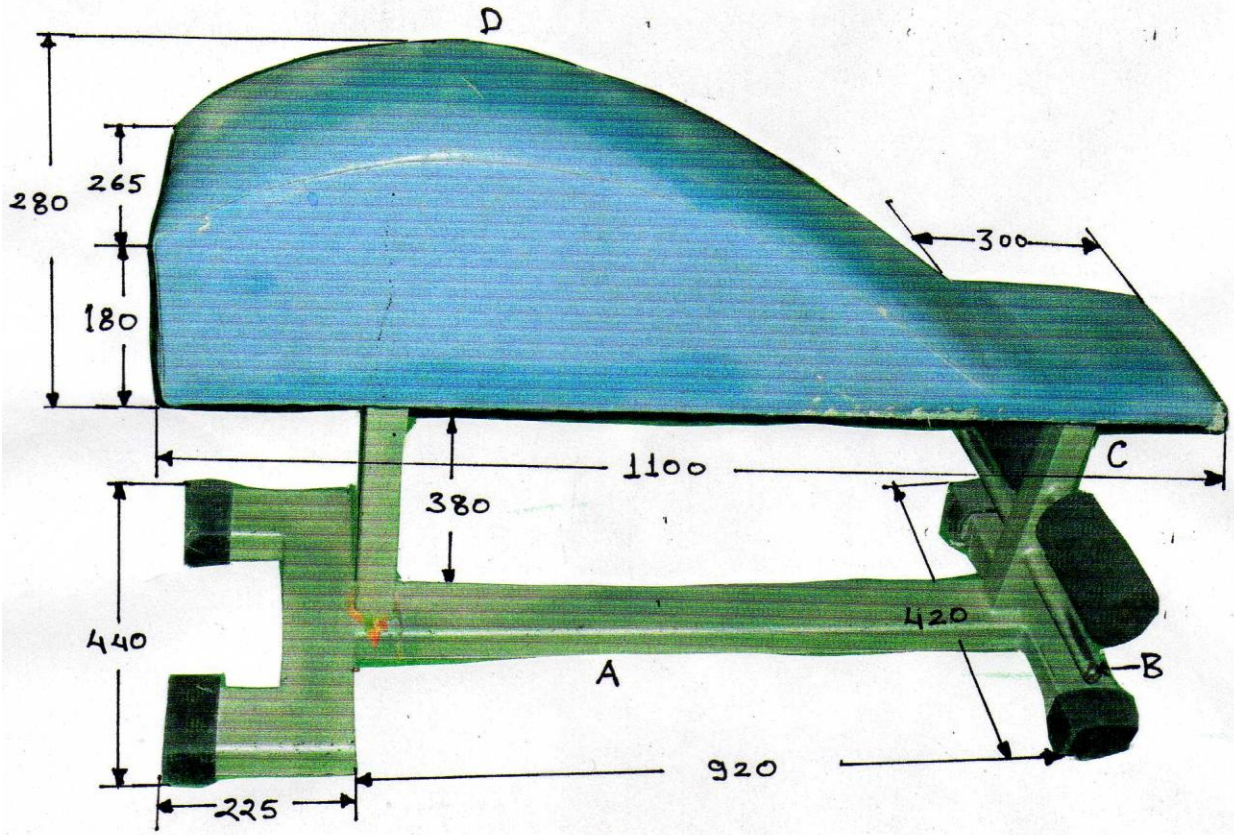

NOTE :- **All Dimensions in mm.**

A :-- Frame made of 95 x 44 mm. M.S. rectangular Section.
B :-- Extension pipe shall made of 25 mm. round M.S. Pipe .
C :-- Supporting frame shall be made of 40 mm square M.S. pipe.
D :-- High quality regzine is fitted over the curved surface.
--- All corners shall be fixed with rubber or p.v.c. brackets.
--- Machine shall be painted by two coat enamel paint over one coat of primer.

Push up Frame

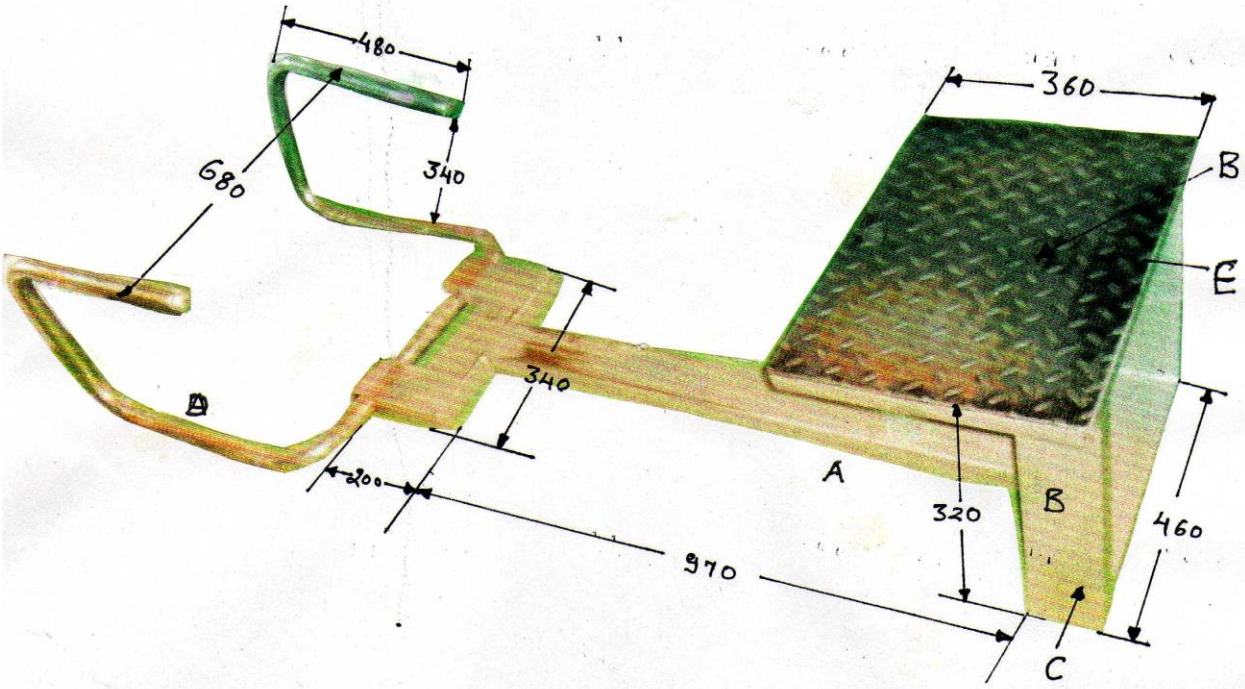

NOTE :- **All Dimensions in mm.**

A,B,C :-- Frame made of 95 x 44 mm. M.S. rectangular Section.

D :-- Hand support made of 25 mm. Nickel polished round pipe .

E :-- Checkered plate shall be made of 5 mm. M.S. plate.

--- All corners shall be fixed with rubber or p.v.c. brackets.

--- Machine shall be painted by two coat enamel paint over one coat of primer.

Thai stretching & Leg curl

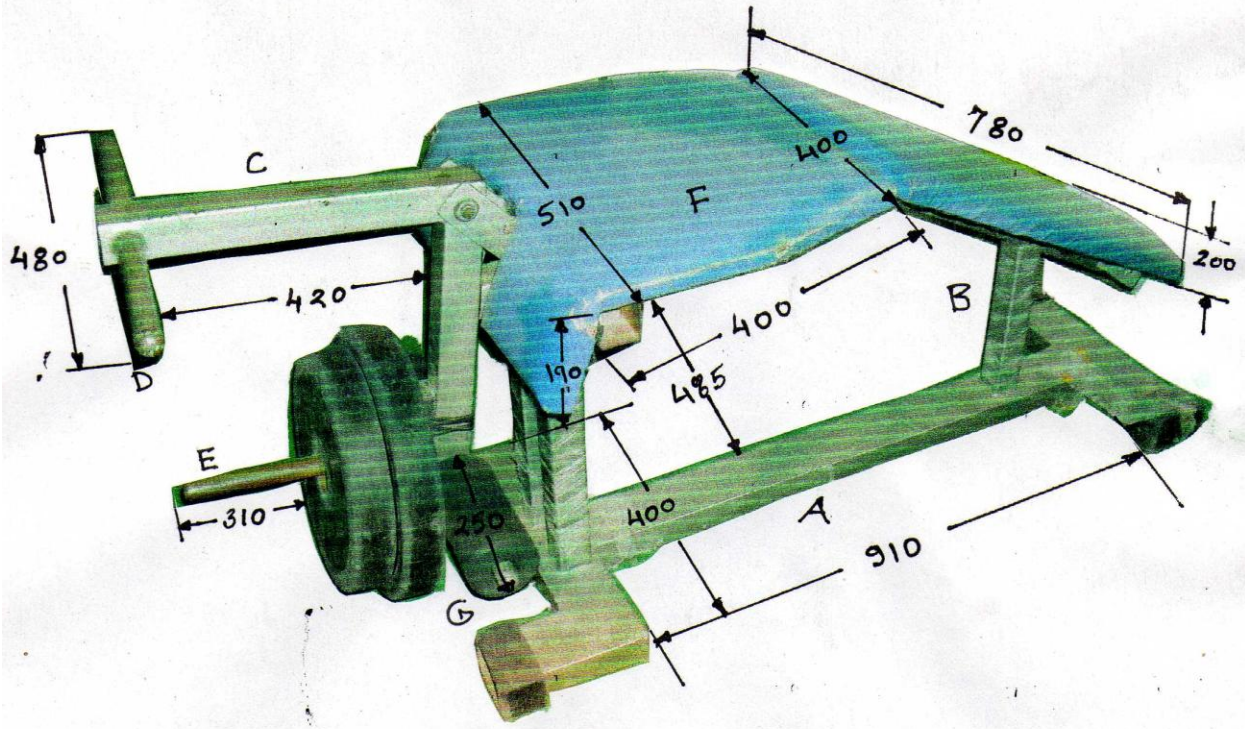

NOTE :- **All Dimensions in mm.**

A :-- Frame made of 95 x 44 mm. M.S. rectangular Section.
B,C:-- Supporting frame made of 40 x 40 mm. square section.
D,E:-- Extension pipe made of 25 mm. round pipe. .
F :-- Sitting arrangement made of high quality regzine with suitable frame..
G :-- Cushion made of high quality foam material with center hole.
--- All corners shall be fixed with rubber or p.v.c. brackets.
--- Machine shall be painted by two coat enamel paint over one coat of primer.

Double Twister

Sitting & Standing

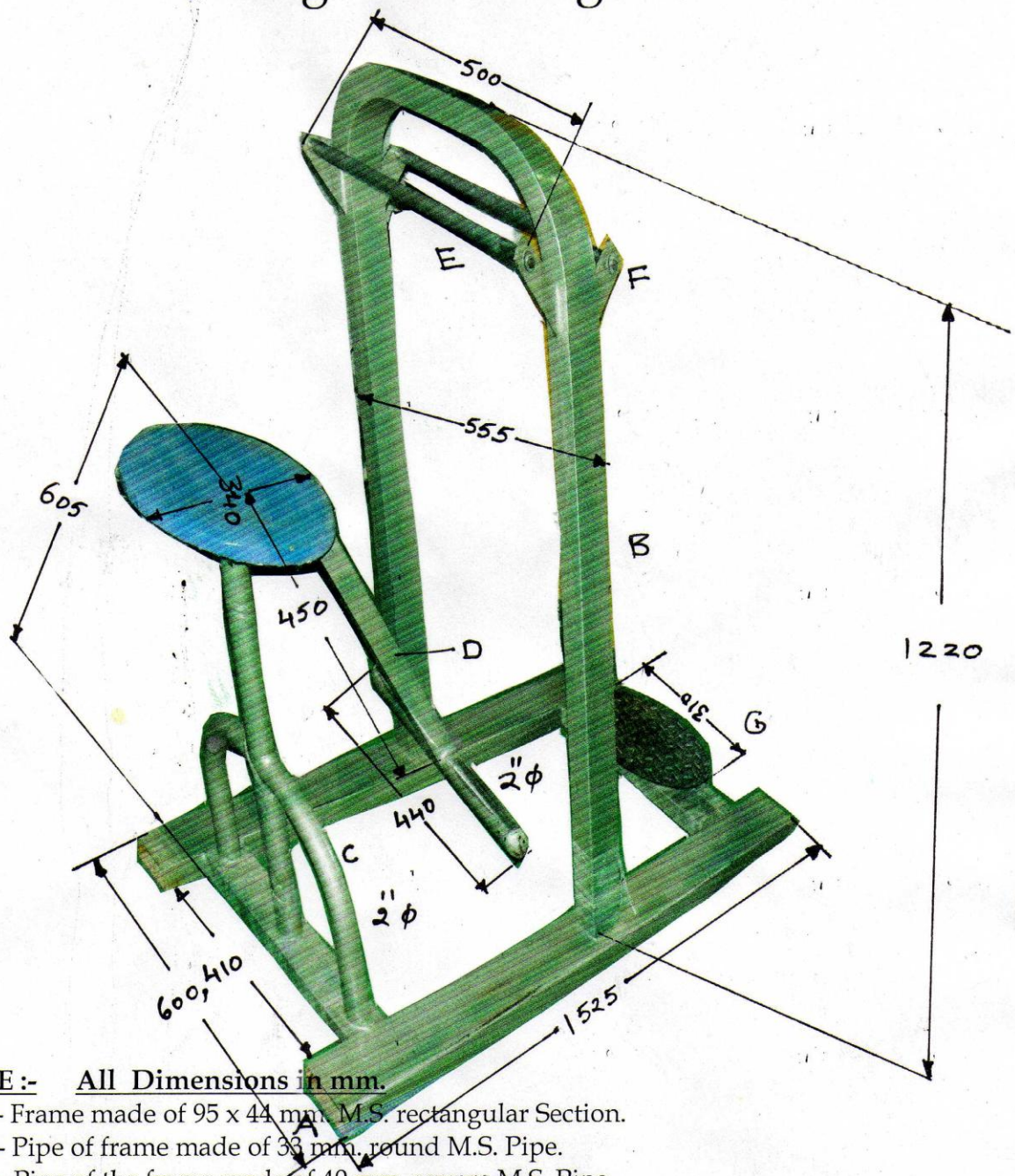

NOTE :- **All Dimensions in mm.**

A,B :-- Frame made of 95 x 44 mm. M.S. rectangular Section.
C :-- Pipe of frame made of 33 mm. round M.S. Pipe.
D :-- Pipe of the frame made of 40 mm. square M.S. Pipe.
E :-- Gripping member made of 20 mm. knurling M.S. Pipe.
F :-- I.S.F. 37 x 5 mm. used for holding the gripping member.
G :-- Checkered plate made of 4 mm M.S sheet for standing.
--- All corners shall be fixed with rubber or p.v.c. brackets.
--- All corners of the bench should be chamfered.
--- Machine shall be painted by two coat enamel paint over one coat of primer.
--- Regzine wherever used shall be of high finish & fixed over 20 mm. ply.

Leg & Thai Exerciser

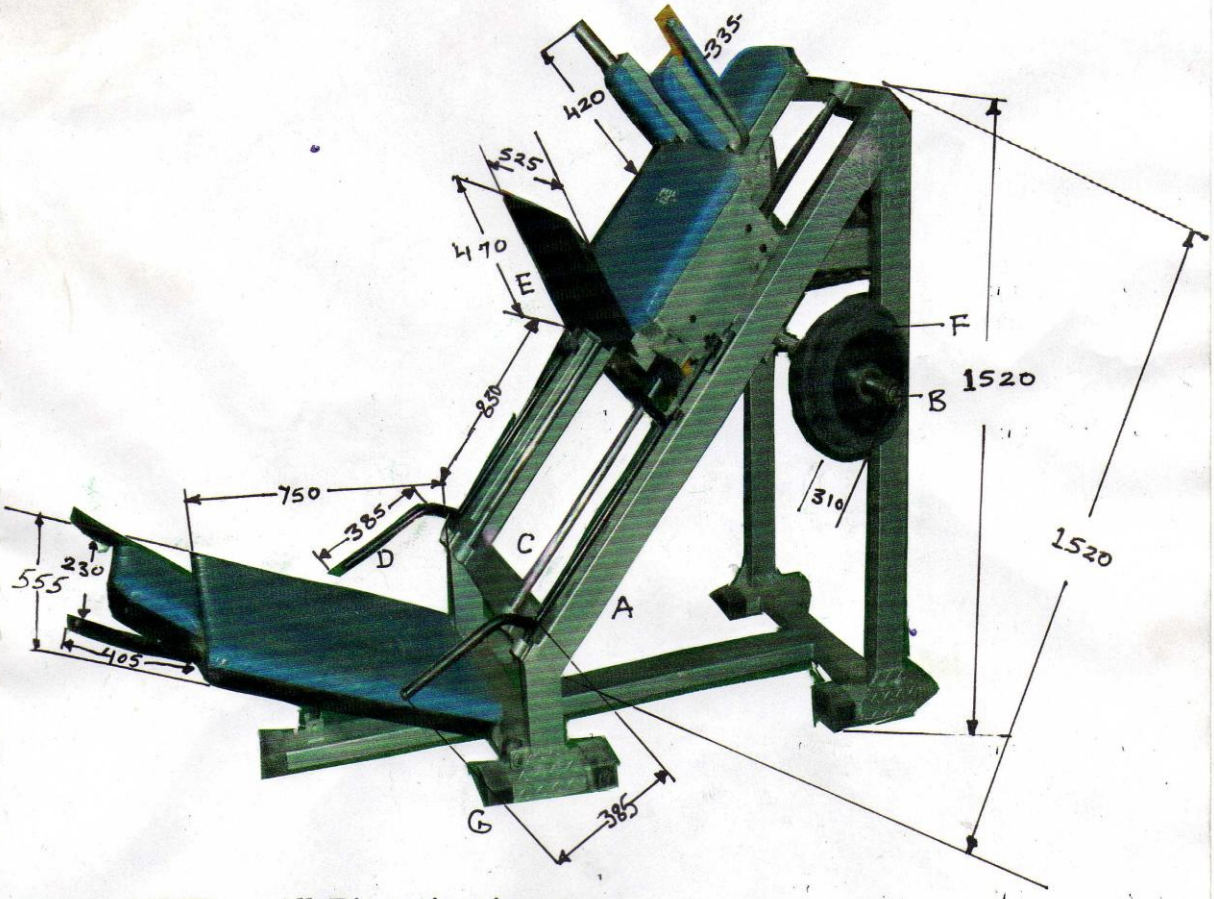

NOTE :- **All Dimensions in mm.**

A :-- Frame made of 95 x 44 mm. M.S. rectangular Section.
B :-- Supporting rod for lift load made of 25 mm. round M.S. bar.
C :-- Solid M.S. Rod on which the frame slide shall be made of 25 mm. dia.
D :-- Gripping & Holding member made of 20 mm. knurling M.S. rod.
E :-- Checkered plate made of 4 mm M.S sheet for standing.
F :-- P.V.C,/Cast Iron Load of different capacity.
--- All corners shall be fixed with rubber or p.v.c. brackets.
--- All corners of the bench should be chamfered.
--- Machine shall be painted by two coat enamel paint over one coat of primer,
--- Regzine wherever used shall be of high finish & fixed over 20 mm. ply.

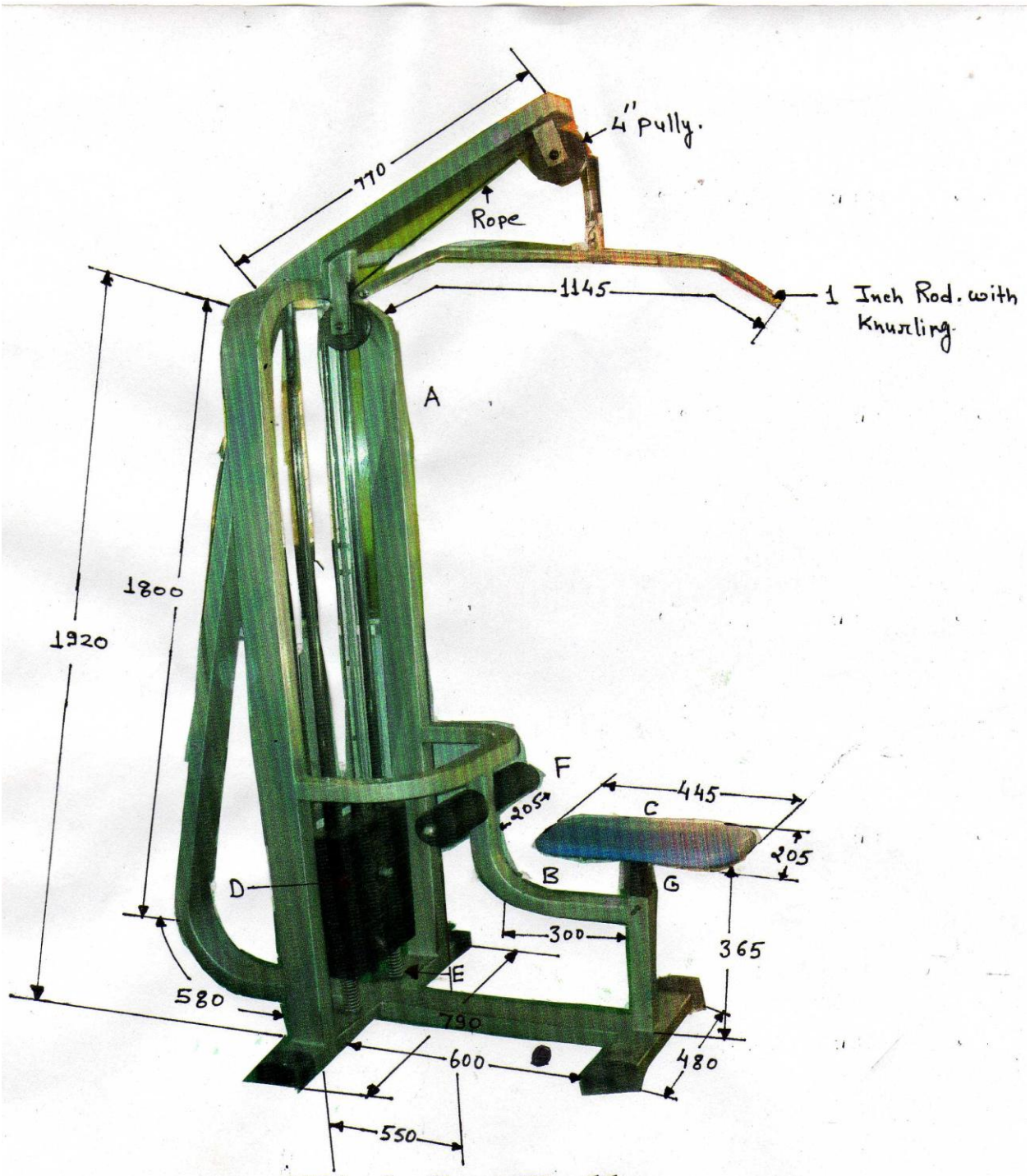

High Lat Pulley

NOTE :- All Dimensions in mm.

A :-- Frame made of 95 x 44 mm. M.S. rectangular Section.
B :-- Supporting frame made of 40 x 40 mm. rectangular section.
C :-- Sitting arrangement made of high quality regzine.
D :-- P.V.C,/Cast Iron Load of different capacity.
E :-- Helical spring to absorbed shock.
F :-- P.V.C,/Cast Iron Load of different capacity.
--- All corners shall be fixed with rubber or p.v.c. brackets.
--- Machine shall be painted by two coat enamel paint over one coat of primer.

Bench Press

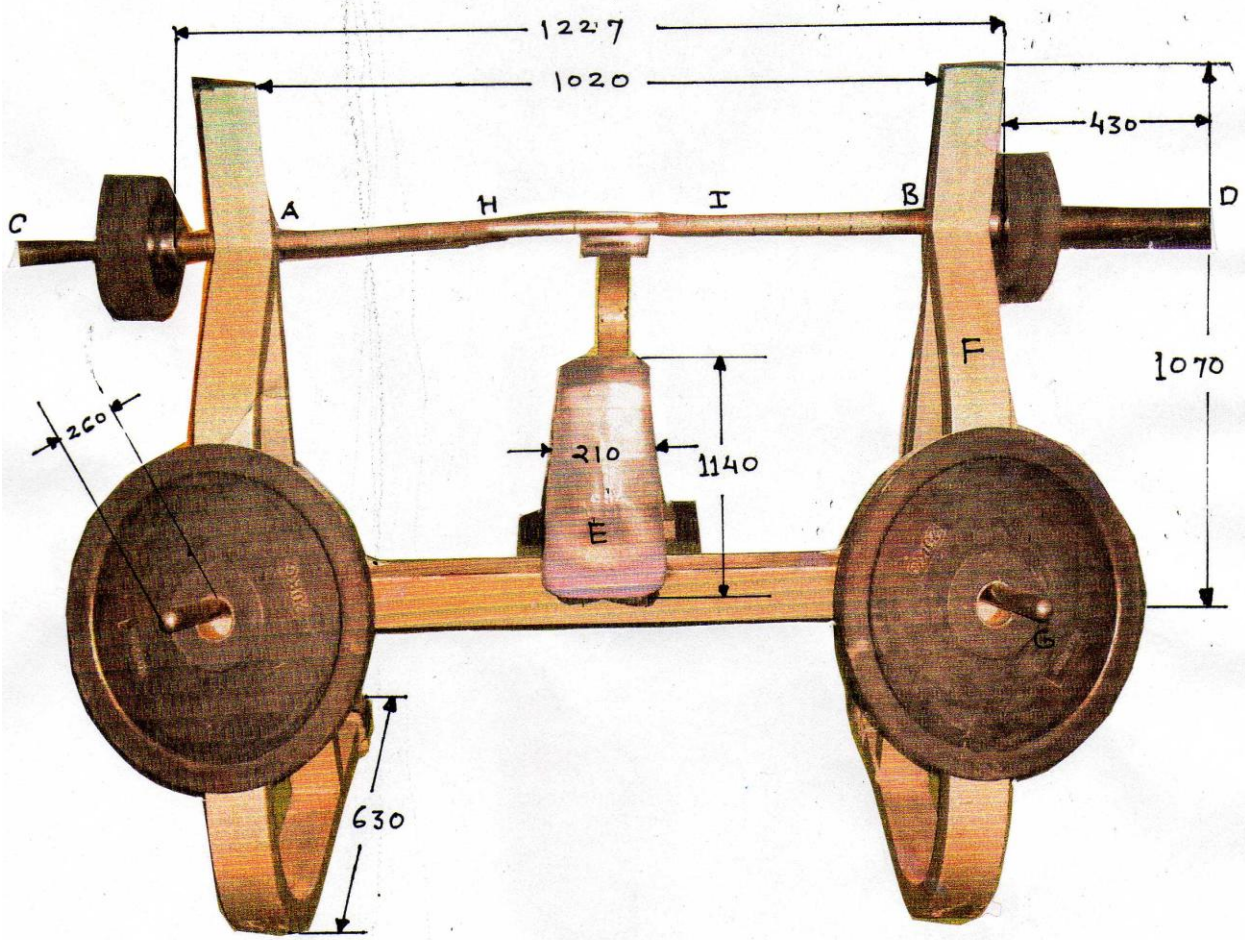

NOTE :- **All Dimensions in mm.**

A :-- Weight lifter made of Solid M.S. Rod made of 25 mm. diameter.

B :-- Supporting frame made of 40 x 40 mm. rectangular section.

C,D:-- Extension rod having diameter33 mm. fixed with ball bearing .

E :-- Sitting arrangement made of high quality regzine with suitable frame..

F :-- Frame made of 95 x 44 mm. M.S. rectangular Section.

--- All corners shall be fixed with rubber or p.v.c. brackets.

--- Machine shall be painted by two coat enamel paint over one coat of primer.

Abdominal Board

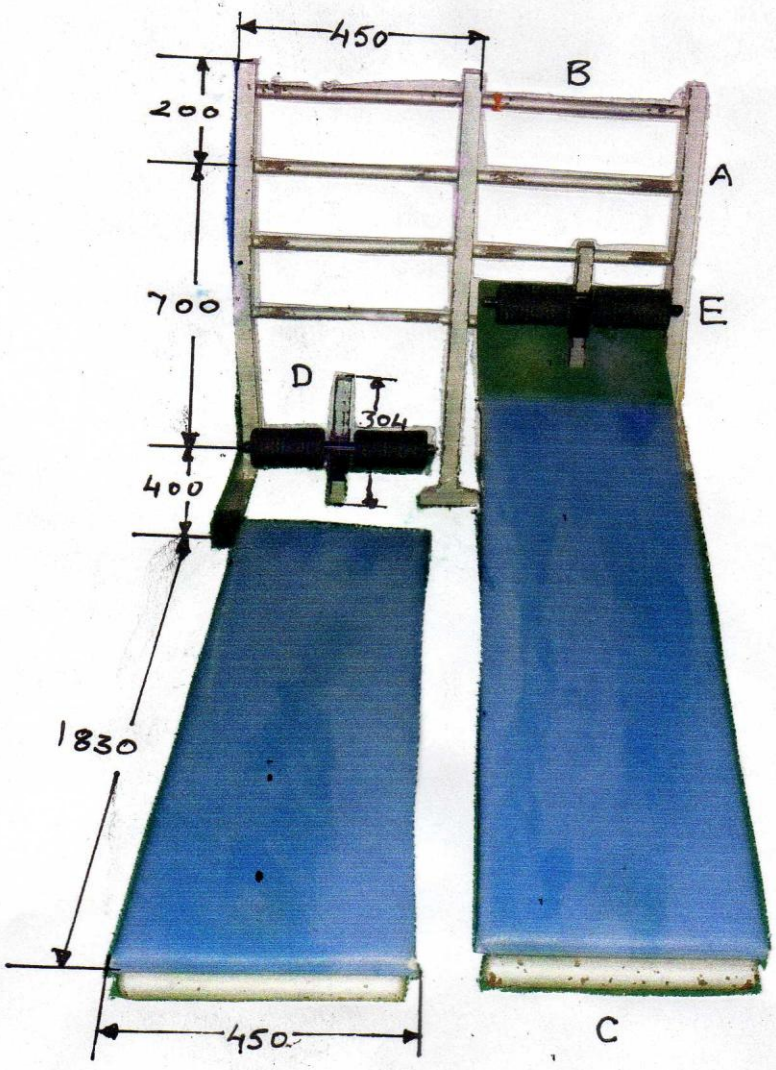

NOTE :- **All Dimensions in mm.**

A :-- Frame made of 95 x 44 mm. M.S. Rectangular pipe.
B :-- Frame made of 25 mm. round M.S. Pipe.
C :-- Pipe of the frame made of 33 mm. round M.S. pipe.
D :-- Pipe of the frame made of 33 mm. round M.S. pipe.
E :-- Cushion for resting the foot made of as per actual practice.
Bench cushion shall made of high finish regzine over 20 mm. water proof ply
All corners shall be fixed with rubber or p.v.c. brackets.
All corners of the bench should be chamfered.
Bench shall be painted by two coat enamel paint over one coat of primer.

Decline Bench

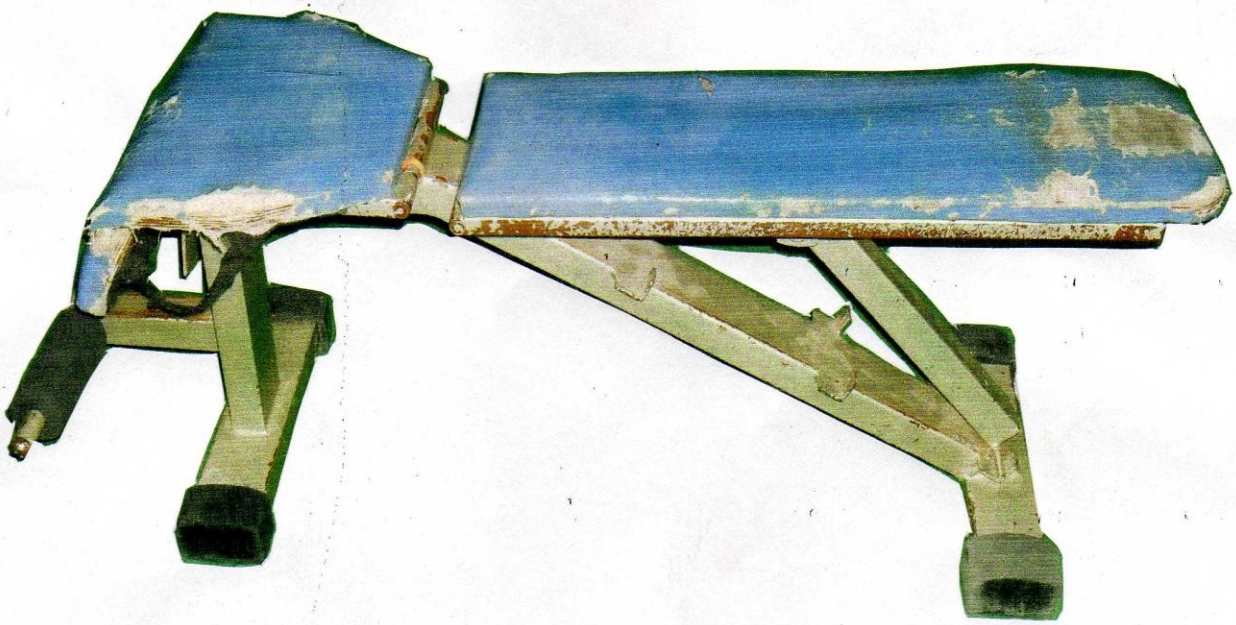

NOTE :- **All Dimensions in mm.**

Main Frame Size 95 x 44 mm.& Supporting frame size shall be 44 x 44 mm.

Bench cushion shall made of high finish regzine over 20 mm. water proof ply

All corners shall be fixed with rubber or p.v.c. brackets.

All corners of the bench should be chamfered.

Bench shall be painted by two coat enamel paint over one coat of primer.

Flat Bench

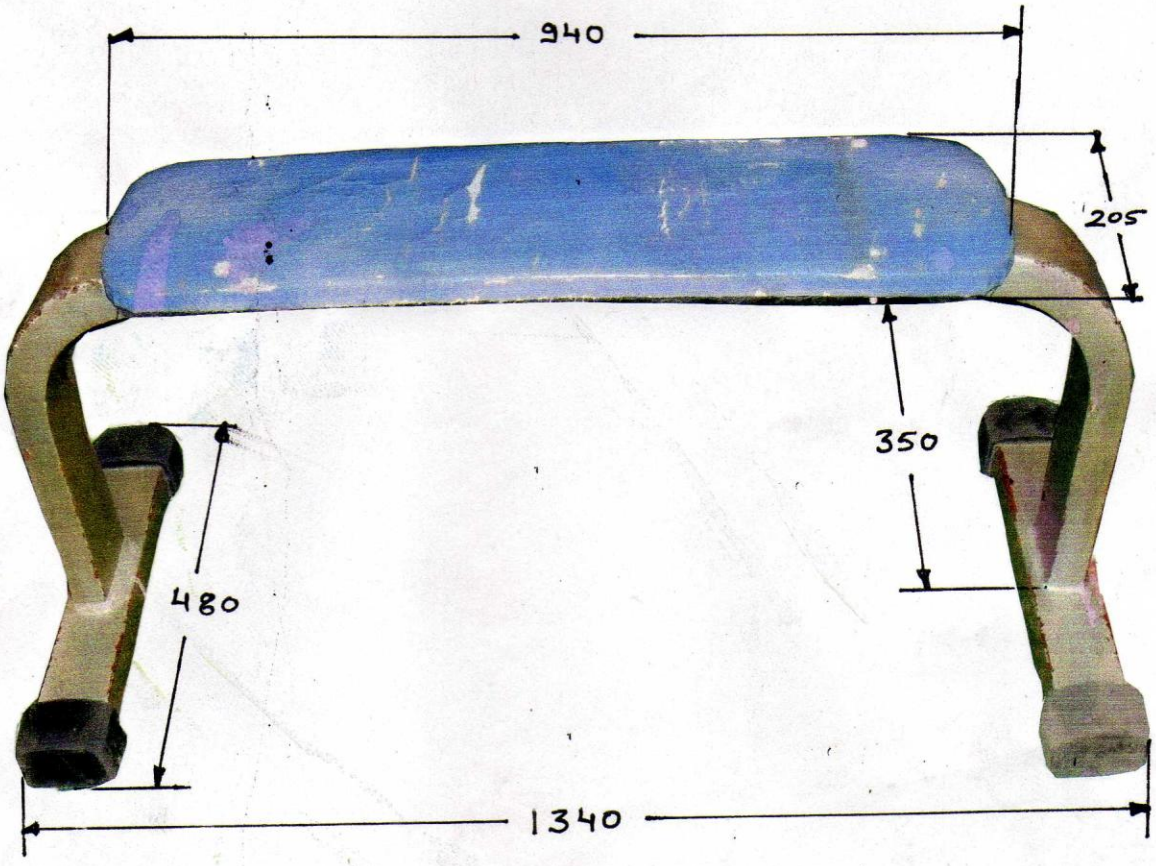

NOTE :- **All Dimensions in mm.**

Main Frame Size 95 x 44 mm.

Bench cushion shall made of high finish regzine over 20 mm. water proof ply

All corners shall be fixed with rubber or p.v.c. brackets.

All corners of the bench should be chamfered.

Bench shall be painted by two coat enamel paint over one coat of primer.

Multi machine

For Chest , Shoulder, Triceps & Biceps

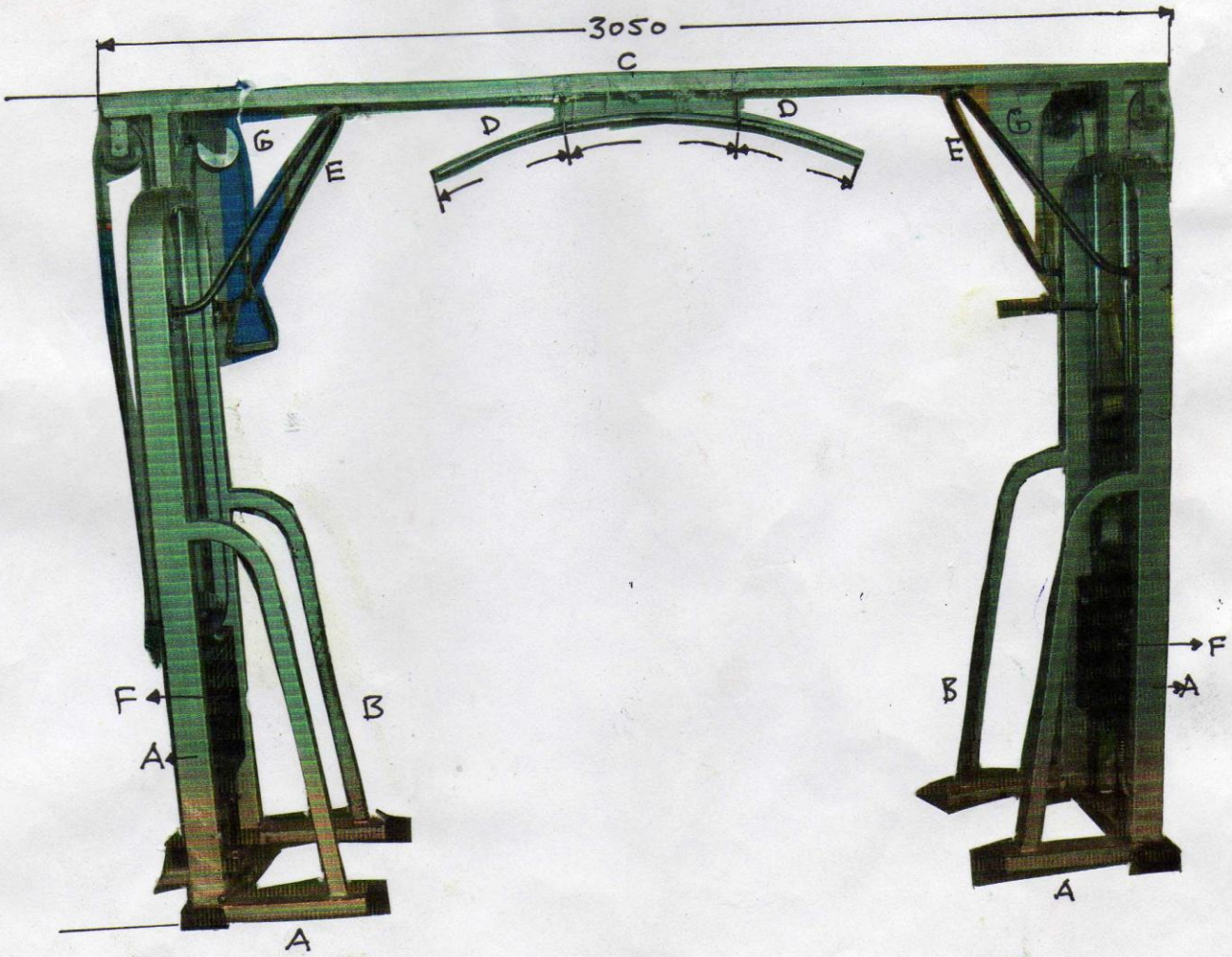

Abe Exerciser

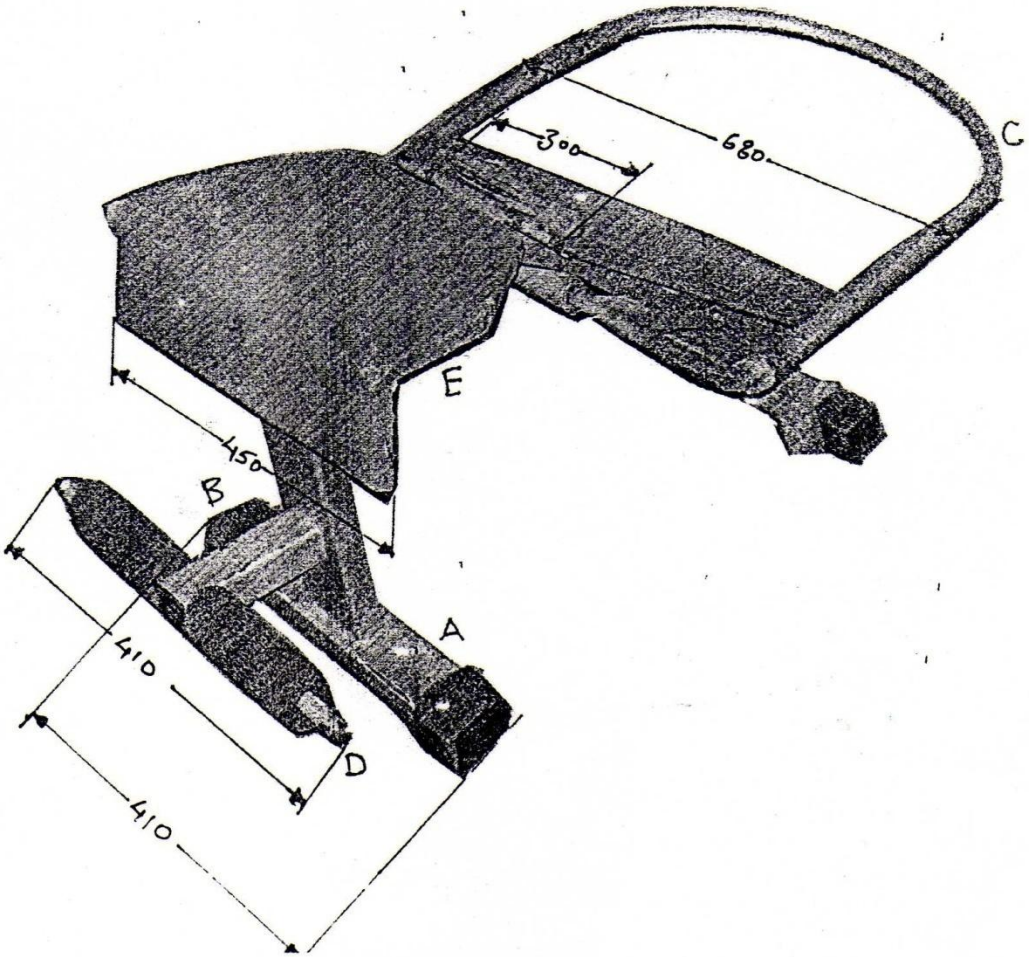

(53)

Doumble Stand

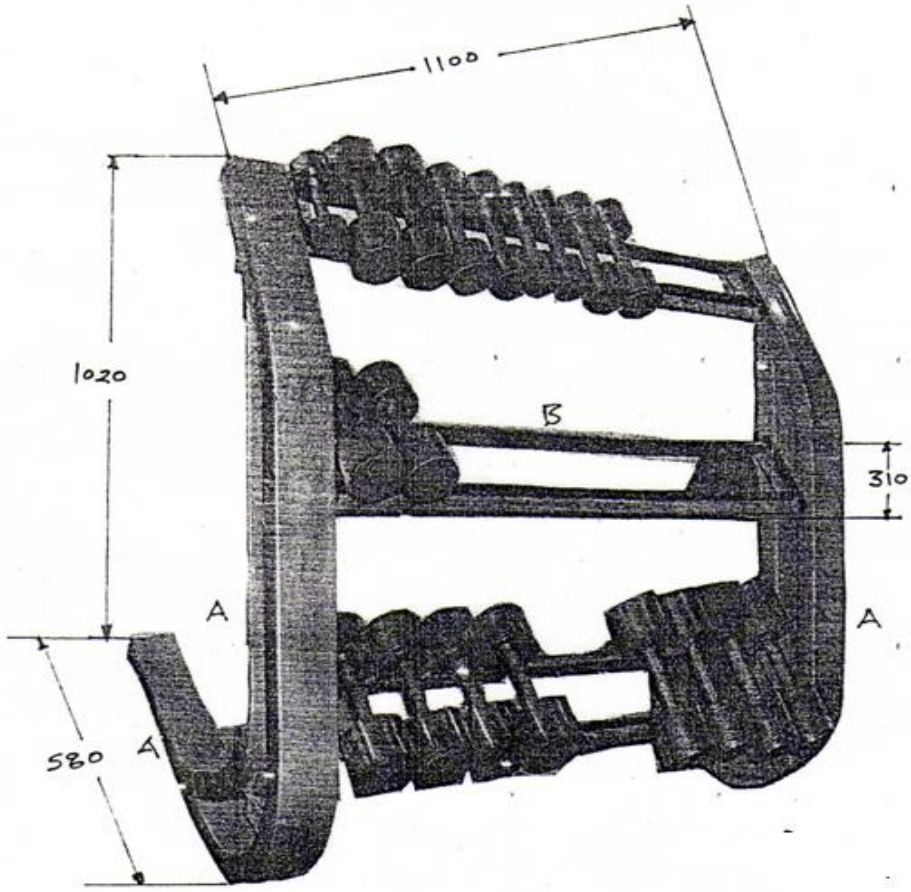

Bicycle Exerciser

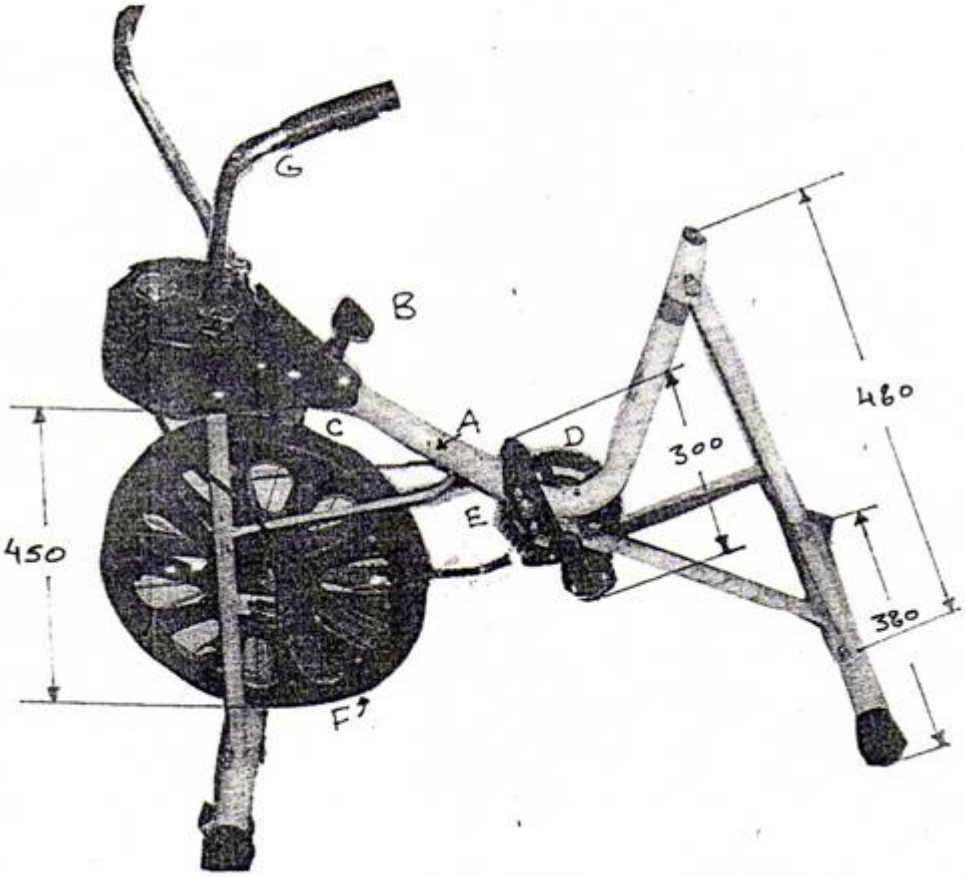

Chest & Shoulder Exerciser

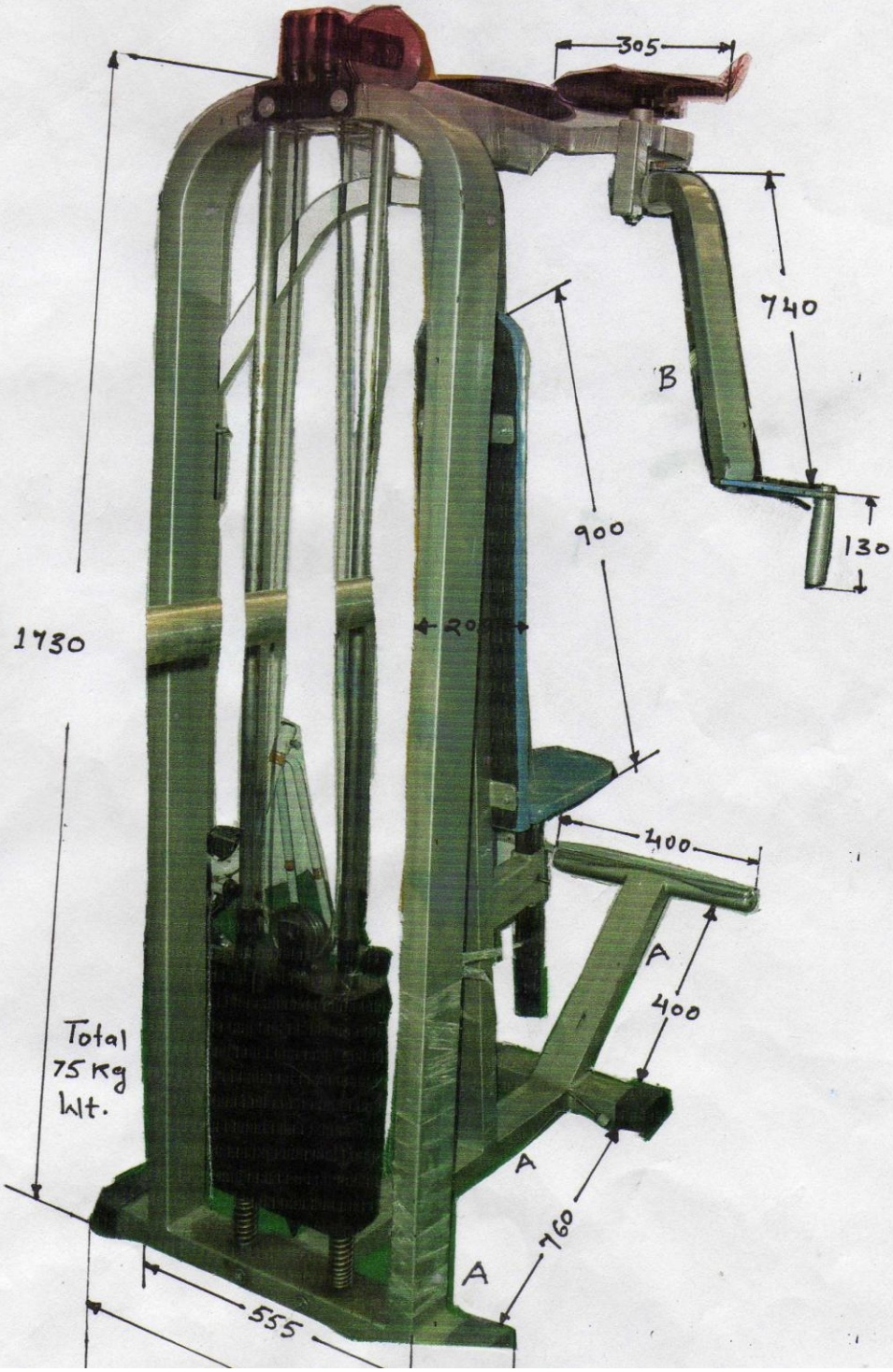

(56)

Commercial Fitness Machine

The Motor & operational parts are totally divided by a belt which allows optimum vibration & load
Technology specifically designed for the human body, ensuring minimal head movement
DC Motor: 2.0 hp Micro Processor controls type
PCB: LED 2 windows console display exercise amount, calories, time, speed & distance
Exercise applications:

- Straight Standing pose
- Twisted Standing Pose
- Horse Riding Pose
- Upper part of the body pose

Special 2 row bearings offer smooth running & endurance
Does not require physical strength, Stamina or skill requires to achieve full exercise effect
Safety handles ergonomically designed for comfort and ease
Max. User Weight: 120 kgs

Prefabricated Steel Structure For Outdoor Gym Machines

1. SKY WALKER :--

Sky walker shall be made of Tube (Hollow section) as per IS 1239. All movement joints shall be synchronized , constrained and free from obstructions. Each movement joints shall be full of lubrication and cover from plastic cap to restrict leakage. Sharp edges shall be avoided and all corners shall be properly chamfered. Whole structure shall be coated with powder coating or two coat synthetic enamel painting. This work is super finished powder coated work.

2. LEG PRESS :--

Leg Press shall be made of Tube (Hollow section) as per IS 1239. From 25 mm. to 100 mm. diameter. All movement joints shall be synchronized , constrained and free from obstructions. Each movement joints shall be full of lubrication and cover from plastic cap to restrict leakage. Sharp edges shall be avoided and all corners shall be properly chamfered. Whole structure shall be coated with powder coating or two coat synthetic enamel painting. This work is super finished powder coated work.

3. AIR WALKER :--

Air walker shall be made of Tube (Hollow section) as per IS 1239. From 25 mm. to 100 mm. diameter. All movement joints shall be synchronized , constrained and free from obstructions. Each movement joints shall be full of lubrication and cover from plastic cap to restrict leakage. Sharp edges shall be avoided and all corners shall be properly chamfered. Whole structure shall be coated with powder coating or two coat synthetic enamel painting. This work is super finished powder coated work.

4. GARDEN CYCLE :--

Garden cycle shall be made of Tube (Hollow section) as per IS 1239. From 25 mm. to 100 mm. diameter. All movement joints shall be synchronized , constrained and free from obstructions. Each movement joints shall be full of lubrication and cover from plastic cap to restrict leakage. Sharp edges shall be avoided and all corners shall be properly chamfered. Whole structure shall be coated with powder coating or two coat synthetic enamel painting. This work is super finished powder coated work.

5. CROSS TRAINER :--

Cross Trainer shall be made of Tube (Hollow section) as per IS 1239. From 25 mm. to 100 mm. diameter.All movement joints shall be synchronized , constrained and free from obstructions. Each movement joints shall be full of lubrication and cover from plastic cap to restrict leakage. Sharp edges shall be avoided and all corners shall be properly chamfered. Whole structure shall be coated with powder coating or two coat synthetic enamel painting. This work is super finished powder coated work.

6. ROWER :--

Garden cycle shall be made of Tube (Hollow section) as per IS 1239. From 25 mm. to 100 mm. diameter. All movement joints shall be synchronized , constrained and free from obstructions. Each movement joints shall be full of lubrication and cover from plastic cap to restrict leakage. Sharp edges shall be avoided and all corners shall be properly chamfered. Whole structure shall be coated with powder coating or two coat synthetic enamel painting. This work is super finished powder coated work.

7. SEATED PULLER

Seated Puller shall be made of Tube (Hollow section) as per IS 1239. From 25 mm. to 100 mm. diameter. All movement joints shall be synchronized , constrained and free from obstructions. Each movement joints shall be full of lubrication and cover from plastic cap to restrict leakage. Sharp edges shall be avoided and all corners shall be properly chamfered. Whole structure shall be coated with powder coating or two coat synthetic enamel painting. This work is super finished powder coated work.

8. CHEST PULLER :--

Chest Puller shall be made of Tube (Hollow section) as per IS 1239. From 25 mm. to 100 mm. diameter.All movement joints shall be synchronized , constrained and free from obstructions. Each movement joints shall be full of lubrication and cover from plastic cap to restrict leakage. Sharp edges shall be avoided and all corners shall be properly chamfered. Whole structure shall be coated with powder coating or two coat synthetic enamel painting. This work is super finished powder coated wok

9. PECK DECK :--

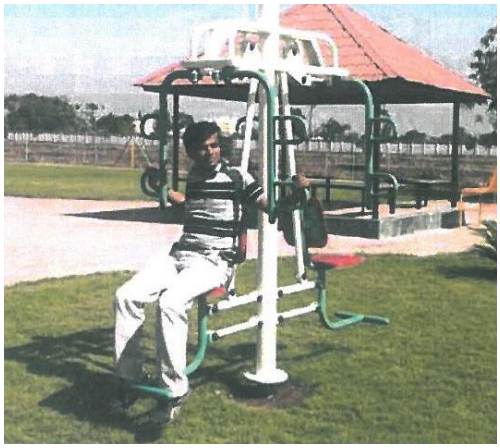

Pack Deck shall be made of Tube (Hollow section) as per IS 1239. From 25 mm. to 100 mm. diameter. All movement joints shall be synchronized , constrained and free from obstructions. Each movement joints shall be full of lubrication and cover from plastic cap to restrict leakage. Sharp edges shall be avoided and all corners shall be properly chamfered. Whole structure shall be coated with powder coating or two coat synthetic enamel painting. This work is super finished powder coated wok

10. POMMEL HORSE :--

Pommel Horse shall be made of Tube (Hollow section) as per IS 1239. From 25 mm. to 100 mm. diameter. All movement joints shall be synchronized , constrained and free from obstructions. Each movement joints shall be full of lubrication and cover from plastic cap to restrict leakage. Sharp edges shall be avoided and all corners shall be properly chamfered. Whole structure shall be coated with powder coating or two coat synthetic enamel painting. This work is super finished powder coated wok

11. SHOULDER BUILDER :--

Shoulder Builder shall be made of Tube (Hollow section) as per IS 1239. From 25 mm. to 100 mm. diameter. All movement joints shall be synchronized , constrained and free from obstructions. Each movement joints shall be full of lubrication and cover from plastic cap to restrict leakage. Sharp edges shall be avoided and all corners shall be properly chamfered. Whole structure shall be coated with powder coating or two coat synthetic enamel painting. This work is super finished powder coated

(66)

12. PARRALEL BARS :--

Parallel Bars shall be made of Tube (Hollow section) as per IS 1239. From 25 mm. to 100 mm. diameter. All movement joints shall be synchronized , constrained and free from obstructions. Each movement joints shall be full of lubrication and cover from plastic cap to restrict leakage. Sharp edges shall be avoided and all corners shall be properly chamfered. Whole structure shall be coated with powder coating or two coat synthetic enamel painting. This work is super finished powder coated wok

13. SURF BOARD :--

Surf board shall be made of Tube (Hollow section) as per IS 1239. From 25 mm. to 100 mm. diameter. All movement joints shall be synchronized , constrained and free from obstructions. Each movement joints shall be full of lubrication and cover from plastic cap to restrict leakage. Sharp edges shall be avoided and all corners shall be properly chamfered. Whole structure shall be coated with powder coating or two coat synthetic enamel painting. This work is super finished powder coated work.

14. SIT UP BOARD :--

Sit Up Board shall be made of Tube (Hollow section) as per IS 1239. From 25 mm. to 100 mm. diameter. All movement joints shall be synchronized , constrained and free from obstructions. Each movement joints shall be full of lubrication and cover from plastic cap to restrict leakage. Sharp edges shall be avoided and all corners shall be properly chamfered. Whole structure shall be coated with powder coating or two coat synthetic enamel painting. This work is super finished powder coated wok

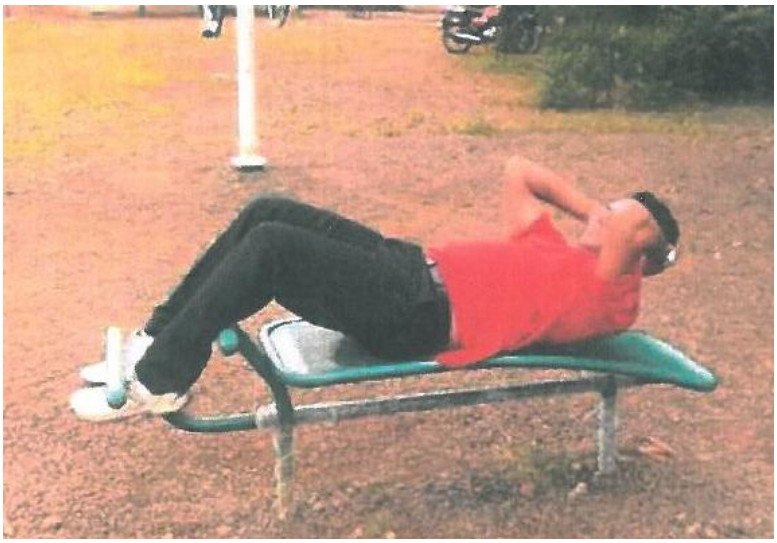

15. HORSE RIDER :--

Horse Rider shall be made of Tube (Hollow section) as per IS 1239. From 25 mm. to 100 mm. diameter. All movement joints shall be synchronized , constrained and free from obstructions. Each movement joints shall be full of lubrication and cover from plastic cap to restrict leakage. Sharp edges shall be avoided and all corners shall be properly chamfered. Whole structure shall be coated with powder coating or two coat synthetic enamel painting. This work is super finished powder coated wok

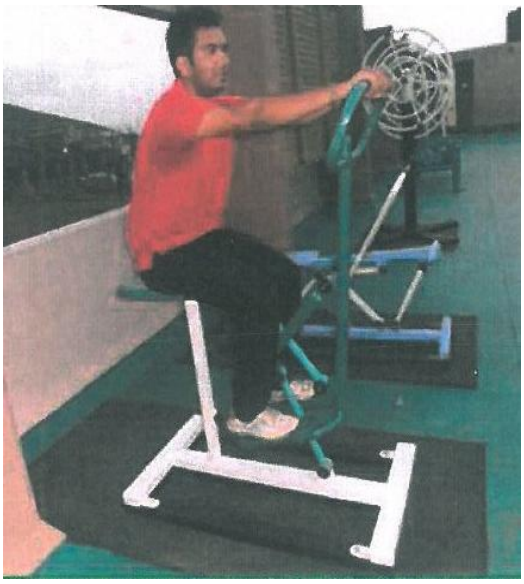

16. MULTI FUNCTION TRAINER :--

Multi functional trainer shall be made of Tube (Hollow section) as per IS 1239. From 25 mm. to 100 mm. diameter. All movement joints shall be synchronized , constrained and free from obstructions. Each movement joints shall be full of lubrication and cover from plastic cap to restrict leakage. Sharp edges shall be avoided and all corners shall be properly chamfered. Whole structure shall be coated with powder coating or two coat synthetic enamel painting. This work is super finished powder coated wok

17. BACK EXTENSSIONER :--

Back Extenssioner shall be made of Tube (Hollow section) as per IS 1239. From 25 mm. to 100 mm. diameter. All movement joints shall be synchronized , constrained and free from obstructions. Each movement joints shall be full of lubrication and cover from plastic cap to restrict leakage. Sharp edges shall be avoided and all corners shall be properly chamfered. Whole structure shall be coated with powder coating or two coat synthetic enamel painting. This work is super finished powder coated

18. STANDING & SEATING TWISTER :--

Standing and seating Twister shall be made of Tube (Hollow section) as per IS 1239. From 25 mm. to 100 mm. diameter. All movement joints shall be synchronized , constrained and free from obstructions. Each movement joints shall be full of lubrication and cover from plastic cap to restrict leakage. Sharp edges shall be avoided and all corners shall be properly chamfered. Whole structure shall be coated with powder coating or two coat synthetic enamel painting. This work is super finished powder coated work

19. SEATED TWISTER :--

Seated Twister shall be made of Tube (Hollow section) as per IS 1239. From 25 mm. to 100 mm. diameter. All movement joints shall be synchronized , constrained and free from obstructions. Each movement joints shall be full of lubrication and cover from plastic cap to restrict leakage. Sharp edges shall be avoided and all corners shall be properly chamfered. Whole structure shall be coated with powder coating or two coat synthetic enamel painting. This work is super finished powder coated work.

20. TRIPLE TWISTER :--

Triple Twister shall be made of Tube (Hollow section) as per IS 1239. From 25 mm. to 100 mm. diameter. All movement joints shall be synchronized , constrained and free from obstructions. Each movement joints shall be full of lubrication and cover from plastic cap to restrict leakage. Sharp edges shall be avoided and all corners shall be properly chamfered. Whole structure shall be coated with powder coating or two coat synthetic enamel painting. This work is super finished powder coated work.

21. PUSHUP BARS :--

Pushup bars shall be made of Tube (Hollow section) as per IS 1239. From 25 mm. to 100 mm. diameter. All movement joints shall be synchronized , constrained and free from obstructions. Each movement joints shall be full of lubrication and cover from plastic cap to restrict leakage. Sharp edges shall be avoided and all corners shall be properly chamfered. Whole structure shall be coated with powder coating or two coat synthetic enamel painting. This work is super finished powder coated wok

(63)

PRE FABRICATED METAL SLIDE

SPECIFICATION :--

1. Main Frame of the slide shall be made of 50 mm. M.S. tube thickness minimum 1.0 mm. as per shown in the drawing.
2. Supporting frame used as a support to main frame shall 25 mm. round M.S. pipe with side support and landing portion of the slide.
3. Frame of Phisalpatti (Slide portion) shall be made of 25 mm. round M.S. pipe and sheet of minimum 1 mm. thickness shall be welded.
4. Main slide sheet shall be made of 1 mm. M.S. sheet dually welded or by pop up rivet to avode any damage to body.
5. Whole slide shall be properly grinded , finished and coating two coat enamel paint on the whole slide.

(64)

FABRICATED METAL DOUBLE SWING

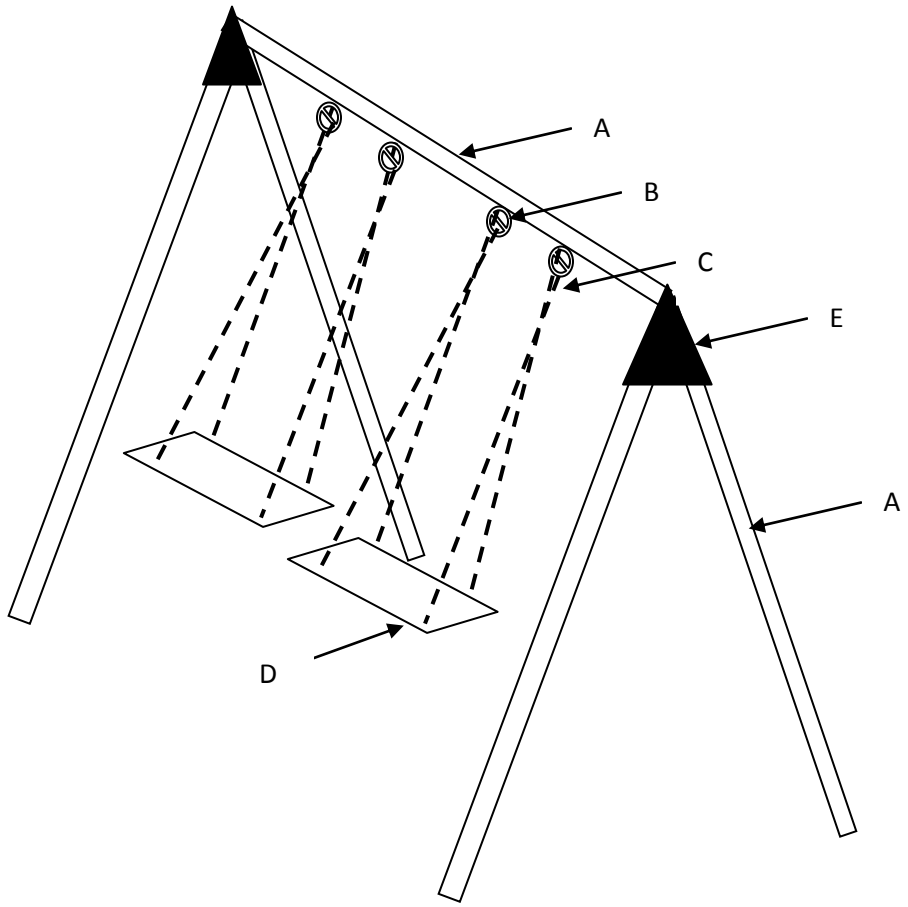

SPECIFICATION :--

1. Main structure A :-- Shall be made of 50 mm. M.S. round pipe having minimum thickness 1 .00 mm.
2. Hanging attachment B :-- Hanging attachment shall be done by bearing with bearing casing and hooks.
3. Chain C :-- 4 no. Chain which connects swing to the main structure of the member A shall be made of 4 mm. round bar chain attached with swing plate form.
4. Swing plate farm D :-- shall be made either angle iron fixed with 1 mm. sheet or F.R.P suitable for seating.
5. E :-- Every joint of pipe should be properly welded with gusset plate.
6. Whole swing should be grinded , finished and coated with two coat enamel paint .
7. Swing shall be fixed on ground by proper excavation and concreting.

Passengers and Public Beneficiaries Items Group 3 (65)

SPECIFICATION OF PRE FABRICATED BUS SHELTER
Model 1

1. **A Side Frame :--** Side frame shall be made of 50 x 50 mm. square hollow section and 20 Swg. G.I. sheet fixed by welding or riveting on the both side of the frame as per standard practice size as shown in the drawing attached.
2. **B Floor** :-- Floor of the shelter shall be made of 10 inches Brick lining masonry filled with lean base of concrete followed by Concrete pavers or concrete base as per consignee instruction.
3. **Roof Frame** :-- Roof frame shall be made of 50 x 50 mm. square M.S. section followed by .5 mm. thick G.i. sheet is fitted for roof.
4. **D Back frame** :-- Back frame shall be made of I.S.A. 25 x 25 x 3 mm. over it 20 swg. G.I. sheet is fitted and fastened with back frame pipe made of 50 x 59 mm. hollow square M.S. pipe.
5. **E Chair** :-- Chair 2/3 No. as per requirement is fixed in concrete base shall be made of 30 mm. round M.S. pipe of standard practice with G.I. sheet fixed over it like bench.
6. **F Railing** :-- 2 No. of railing shall be made of 40 mm. diameter S.S./G.I. pipe as shown in drawing attached.
7. **G Front Sign Board** :-- Front sign board shall be made of frame I.S.A. 25 x 25 x 3 mm. and 20 swg. Sheet fitted over it . this board is placed over the top of the shade.
8. **H Foundation** :-- Foundation of the Whole shade rest on the coloumn footing/ Foundation bolt as per standard practice .
9. **I Solar Light** :-- This arrangement is optional as per demand of Consignee. 20 Watt L.E.D. solar street light 8 hours backup with auto on off arrangement with battery with warrantee of 1 year.

(66)

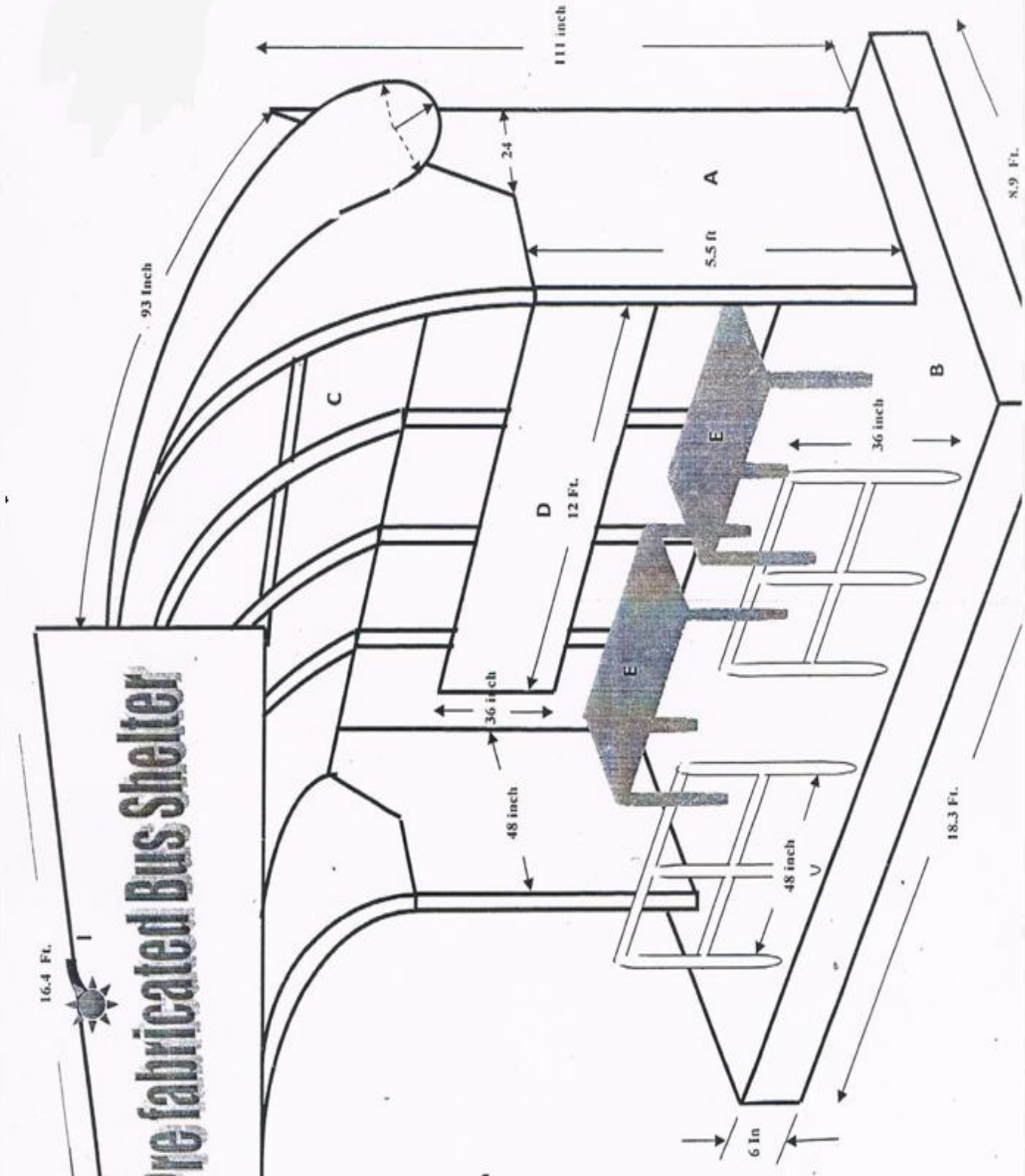
re fabricated Bus Shelter
16.4 Ft.
93 inch
111 inch
24
A
5.5 ft
8.9 Ft.
C
D
12 Ft.
E
E
B
36 inch
36 inch
48 inch
48 inch
V
18.3 Ft.
6 In

(67)

SPECIFICATION OF PRE FABRICATED STEEL STRUCTURE FOR BUS SHELTER MODEL 2

1. **A Side Frame :--** Side frame shall be made of 25 x 25 mm. square hollow section and 1.0 mm. thick Colour Coated Alluminium Composite Panel Sheet fixed on the both side of the frame by screw as per standard practice size as shown in the drawing attached.
2. **B Floor** :-- Floor of the shelter shall be made of 8 inches Concrete Lining filled with lean base of concrete followed by Concrete pavers or concrete base as per consignee instruction.
3. **Roof Frame** :-- Roof frame shall be made of 25 x 25 mm. square hollow section followed by 1.0 mm. thick Colour Coated Alluminium Sheet fitted for roof.
4. **D Back frame** :-- Back shall be made of 25 x 25 mm. square hollow section followed by 1.0 mm. thick Colour Coated Alluminium Sheet fitted for roof.
5. **E Chair** :-- Chair 20 ft. long as per requirement is fixed in concrete base shall be made of 25 mm. Square M.S. pipe of standard practice.
6. **F Vertical Support** :-- 24No. of Vertical shall be made of 40 mm. diameter S.S./G.I. pipe as shown in drawing attached.
7. **G Front Sign Board** :-- Front sign board shall be made of frame I.S.A. 25 x 25 x 3 mm. and 1.0 mm. thick Sheet fitted over it . this board is placed over the top of the shade.
8. **H Foundation** :-- Foundation of the Whole shade rest on the coloumn footing/ Foundation bolt as per standard practice .
9. **I Solar Light** :-- This arrangement is optional as per demand of Consignee. 20 Watt L.E.D. solar street light 8 hours backup with auto on off arrangement with battery with warrantee of 1 year.

(68)

Prefabricated Bus stop Model 2

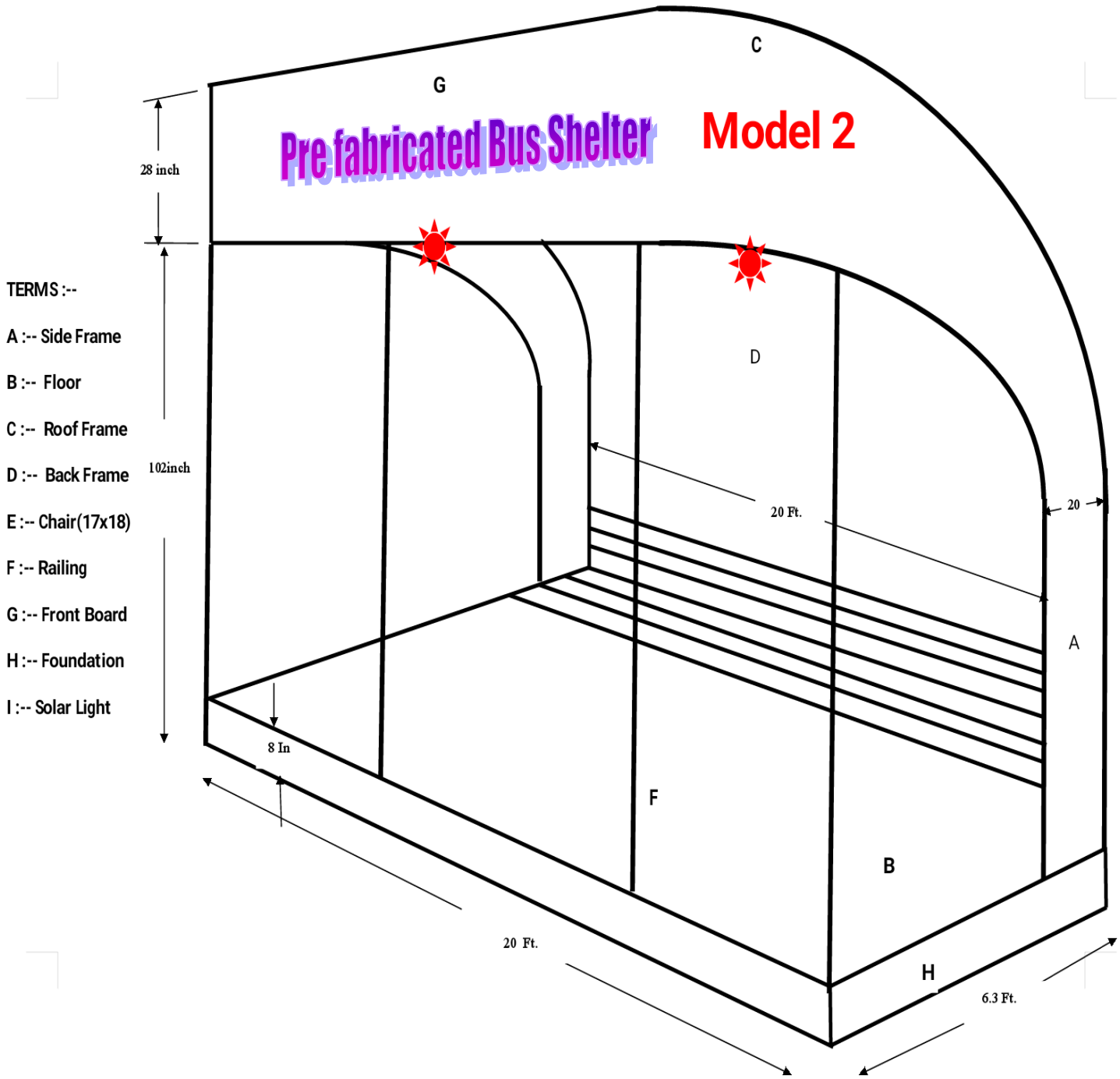

Prefabricated steel structure for Shade For 2 No. Precast Bench

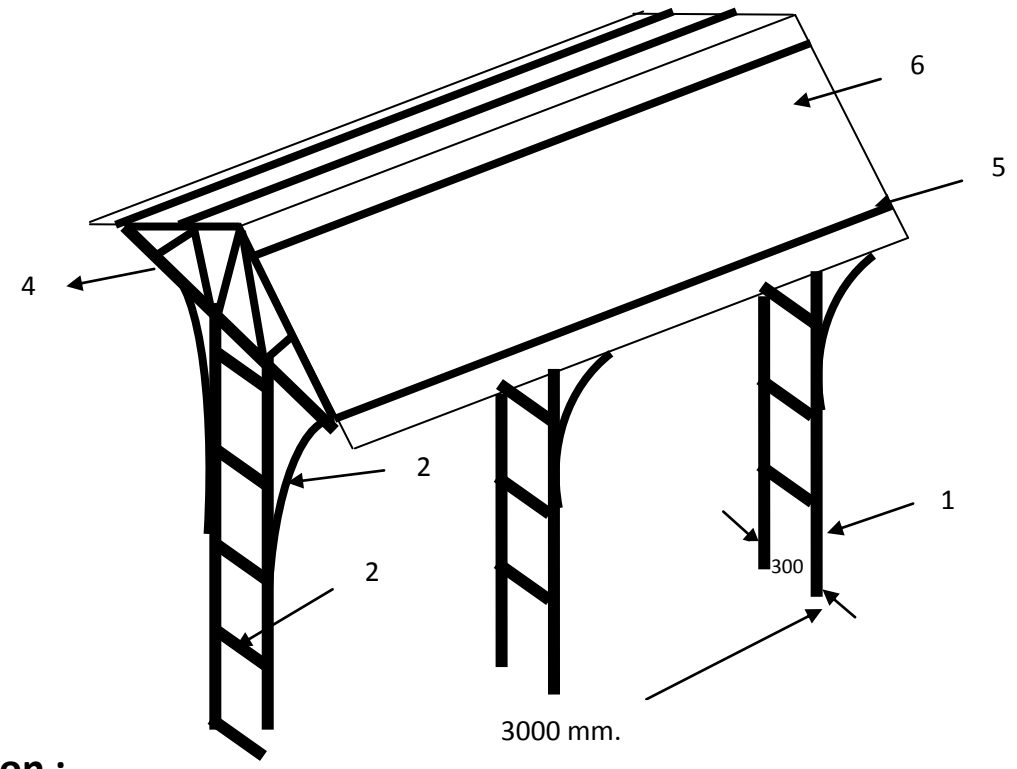

Specification :--

1. Vertical coloumn shall be made of 50 mm. square pipe 1mm. thickness.
2. Horizontal pipes for support vertical pipes shall be made of 30 mm. square pipe of 1 mm. thickness.
3. Curved support on each coloumn shall be made of 25 mm. square pipe 1 mm. thickness.
4. Truss shall be made of 30 mm. square pipe dually welded to gather.
5. Purlins shall be made of 30 mm. square pipe having 1 mm. thickness.
6. Colour coated Corrugated G.I. sheet having .5 mm. thickness shall be fitted over purlins by means of J hooks or pop up rivets.
7. Sign board fitted on the front side of the shade with name of Yojna from which this items are sanctioned shall be made of 25 mm. square hollow section and 1 mm thick M.S. sheet Size 6 ft x 1 ft..
8. Whole structure shall be grouted in the soil up to 25 c.m. cubic depth with 1:2:4: cement concrete mixture.
9. Whole structure dually painted with ready made mixed paint as per consignee instructions.
10. Whole structure shall be grouted up to 1 ft. by proper concreting .

Drawing and Specifications of Precast Bench

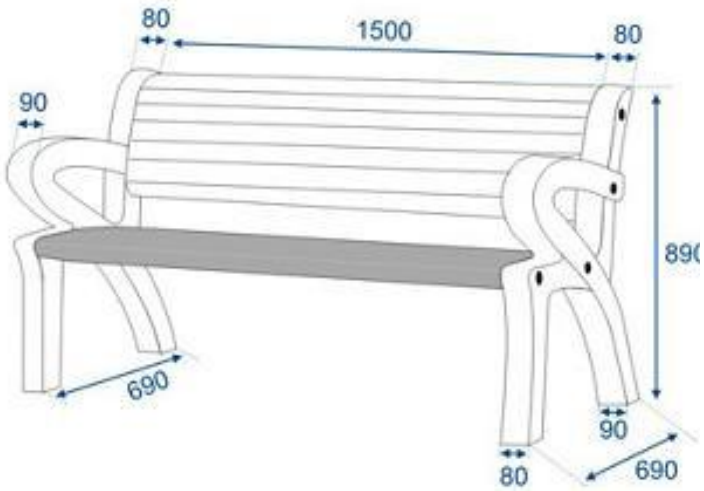

FEATURES & SPECIFICATION

Each bench consists of 2 Nos. L-shape base support in grey cement colour (thickness:80 mm, Back height:890 mm, Front height:450mm, and Base width:690mm) and 1 nos. reinforced concrete plank in red colour of size 1500mm X 400mm X 50mm, and 1 no. of reinforced concrete plank in red colour of size 1500mm X 425mm X 50mm

Overall Dimensions: Seating length of the Bench:1500 mm, Seating height of the Bench:450 mm, Total height of the Bench:890 mm

Manufactured by using M-30 grade of Concrete using vibro compaction process

Reinforced suitably to promote long use and to prevent damage during handling, transportation, & erection

All parts are joined together with galvanized nuts & bolts of suitable size and all bolts are sealed after assembly

Bench top and back planks are treated with special anti-corrosive, water proof coating so as to make surfaces glossy and water proof.

Specifications of shav Vahan

(a) **Chassis of the Trailer :--** Chassis of the trailer shall be made of ISMC 100 x 50 including draw bar in triangular shape as shown in the drawing.

(b) **Frame of the trailer :--** Frame of the trailer shall be made of ISMC 75 x 37 mm. dually welded with the chassis of the trailer as shown in the drawing.

(c) **Roof Structure of the Trailer :--** Roof structure shall be made of Pipe structure welded together to support 22 S.w.g. Sheet or tarpaulin cloth, side portion of the trailer shall be folding clothes to restrict rain water. The folding cloth side may be fold depending upon requirement.

(d) **Ladder :--** shall be made of ISA 25 x 25 x 3 mm. with ISF 25 x 3 mm. with folding arrangement . the ladder can be fold and expand according to the requirement.

(e) **Axle Assembly :--** Axle shall be made of 72 mm. square solid bar or 85 mm. hollow square tube with both end turning to fit 13 & 16 number bearing with check nut arrangement.

(f) **Seating arrangement of The trailer :--** seat of the trailer shall be made of 35 x 35 x 5 I.S.A. and 25 x 25 x 3 I.S.A. with cushion of foam & ragzine as shown in Drawing.

(g) **Tyre Rim & Hub Assembly :--** New tyre of 750 x 16 tyre with double plated rim of having thickness 5 mm. shall be fitted with 8 hole steel hub.

(h) **Floor of the trailer :--** Floor of the trailer shall be made of 1.6 mm. H.R. sheet welded with the frame & chassis of the trailer.

(i) **Dead Body Plate form :--** dead boy plate form shall be made of square hollow section pipe of 50 x 50 mm. as shown in drawing, on which a belt is provided to hold the body on the plate form

(j) **Toeing arrangement of the trailer :--** Towing of the trailer shall be made of triangular shape integrally with chassis with 40 mm. toeing hitch dually fitted with chassis with castle nut arrangement.

(k) **Side Body of the Trailer :--** side body shall be made of angle Iron structure and pipe stricture. Bottom portion of the side shall be cover by corrugated M.S. sheet of .65 mm. thickness, Middle portion of the side shall be made of pipe frame work and rest top portion is also made of pipe frame work. In rainy season side can be covered by folding tarpaulin as required.

(l) **Leaf spring assembly of the trailer :--** Leaf spring shall be made of 13 leaves keeping eye to eye distance 900 mm. the thickness of the leaf shall be 10 mm and width shall be 70 mm. with u clip and center bolt and u clamp arrangement fitted with chassis by means of Hanger & shackle arrangement as per standard practice.

±5% Tolerance are given to overall dimensions.

Baikunth Vahan (Tractor Operated)

All dimension in mm.

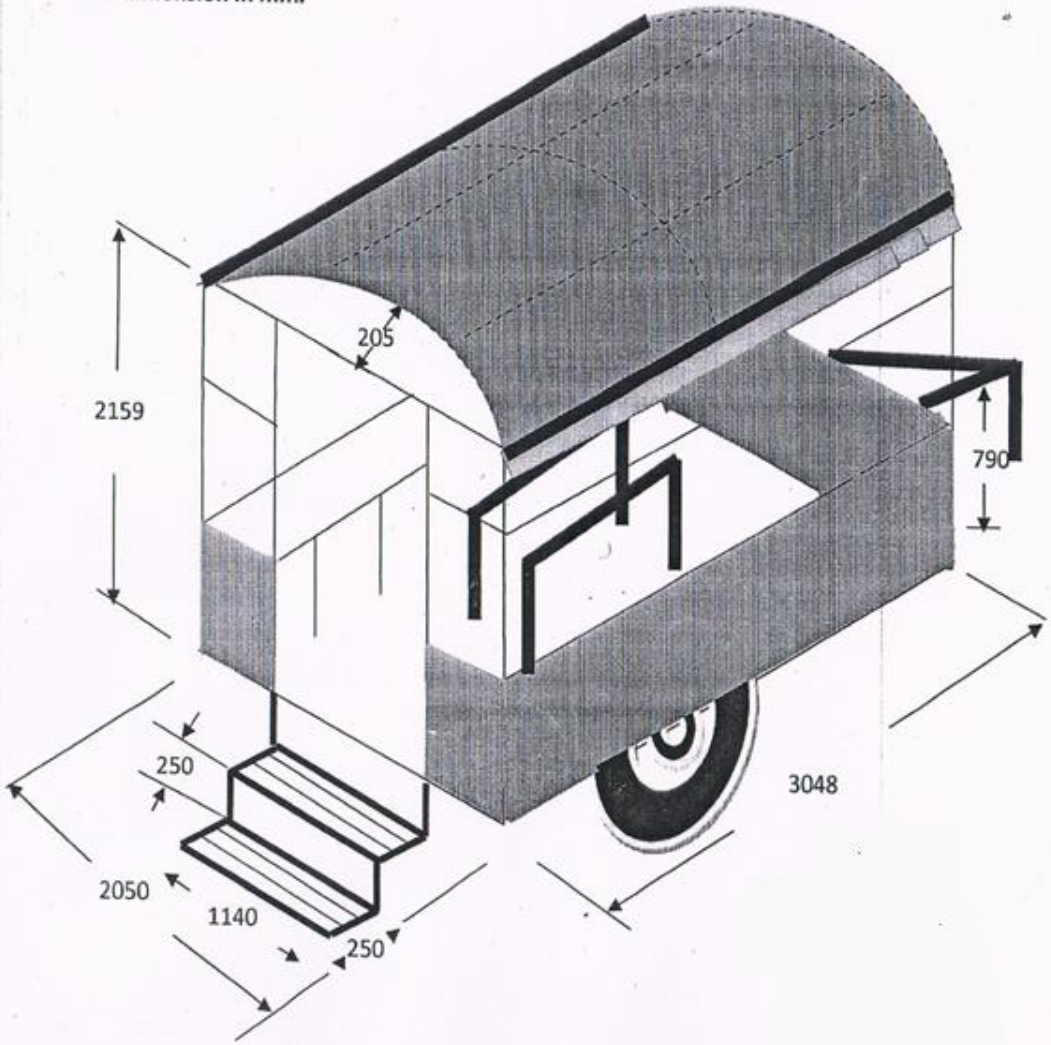

Specification :--

A -- Chassis of the Trailer

B -- Frame of the Trailer

C -- Roof Structure of the trailer.

D -- Ladder

E -- Axle Assembly of the Trailer.

F -- Seating arrangement.

G -- Tyre , Rim, Hub Assembly.

H – Floor of the Trailer.

I -- Plate form of Dead Body.

J –Toeing Arrangement of the Trailer

K – Side Body of the Trailer

L – Leaf Spring Assembly of the Trailer

Detail Drawing & Specification of Parts of Shav Vahan (Baikunth Wahan)

(A) Chassis of the Trailer , (B) Frames of the Trailer (E) Axle Assembly (G) Tyre Tube Hub Assembly, (J) Toeing Arrangement of the trailer (I) Plate form of body :--

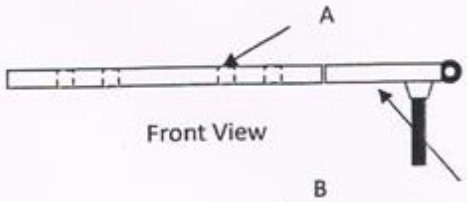

Front View

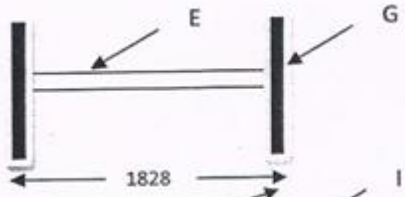

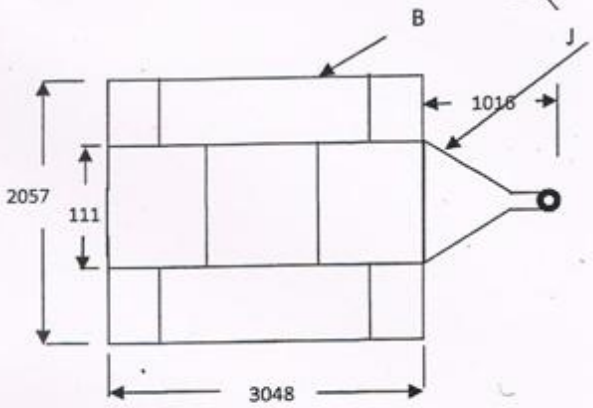

Top View

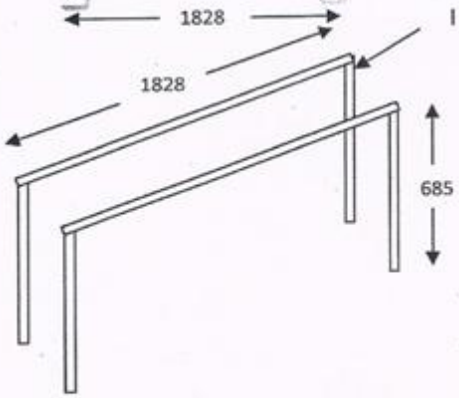

Schematic Diagram of (C) Roof Structure of Trailer , (H) Floor of the Trailer, (D) Ladder, (H) Side body of the Trailer :--

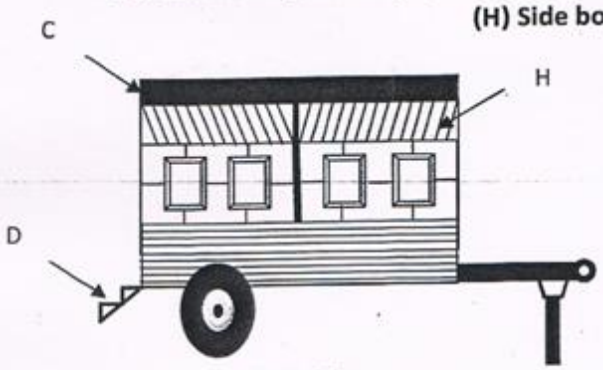

Front View

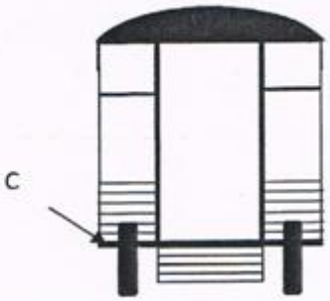

Left Side View

Right Side View

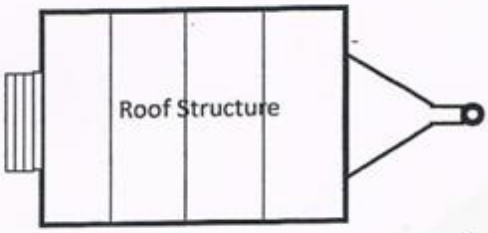

Top View

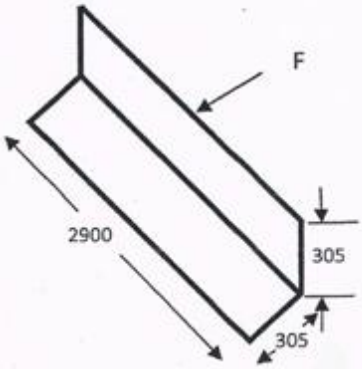

Layout Plan of of Pre Fabricated Shav Dah Shala (Mukti Dham) C

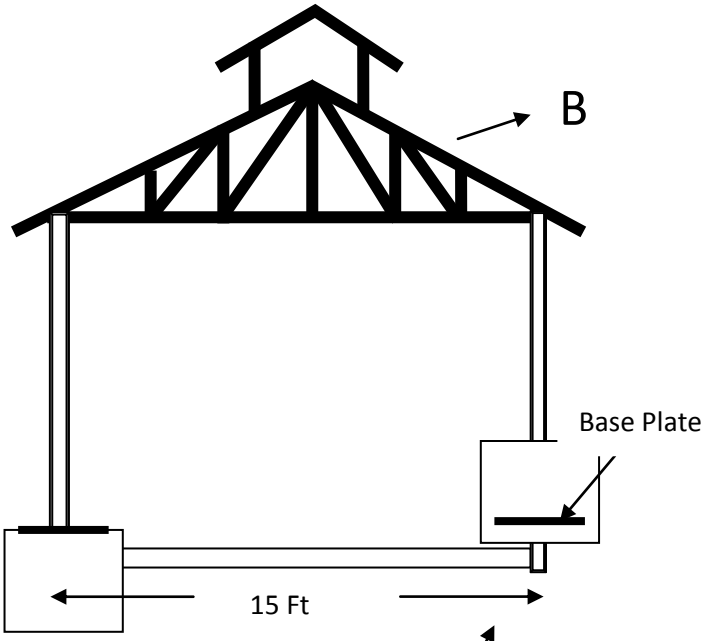

Side View

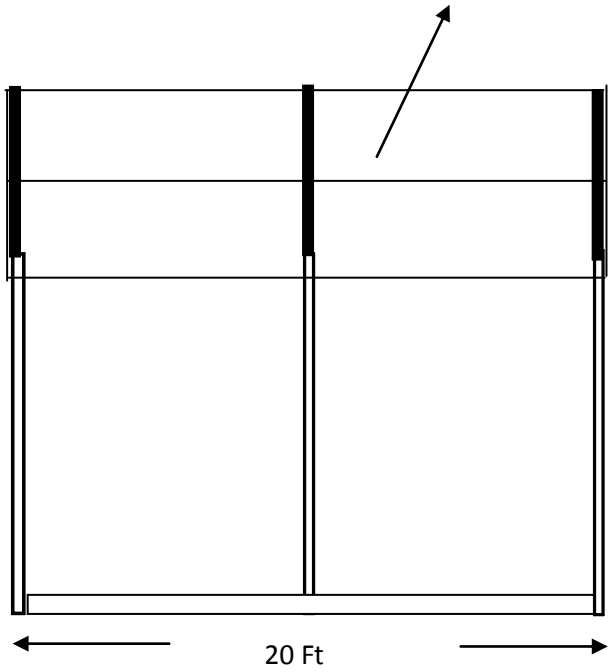

Front View

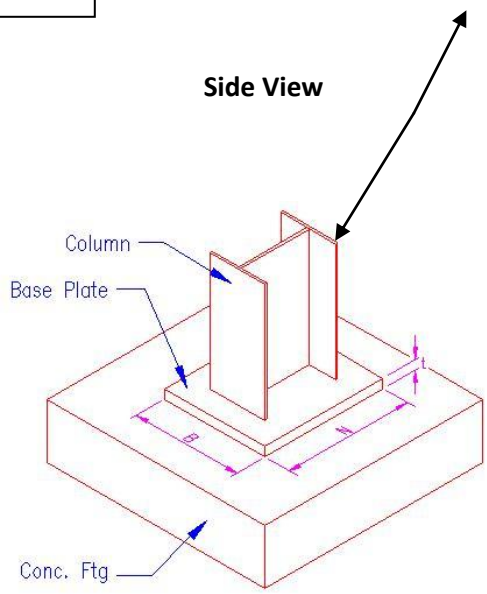

Footing of Steel I section

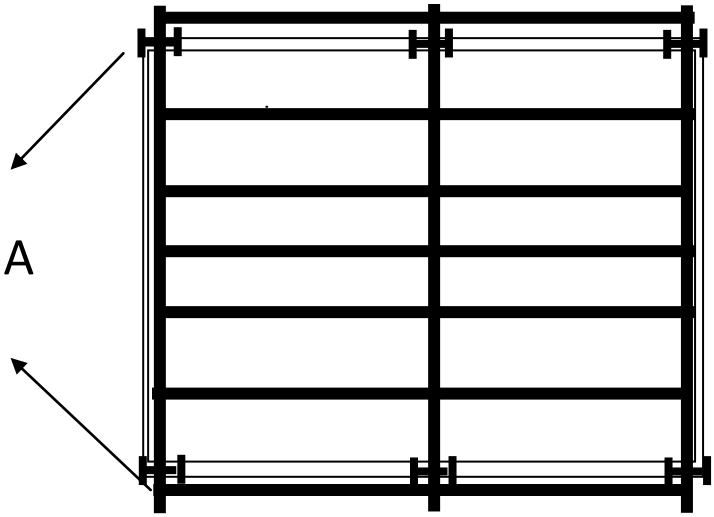

Top View

Detail Specifications of fabricated Shamshan (Mukti Dham)

S. No.	Detail of Specifications	Quantity
1.	A :-- Coloumn shall be made of ISMB 150 x 75 (I Section)	6 No.
2.	I section Footing :-- Base plate having thickness 10 mm. width 10 Inch x 8 Inch shall be placed in the concrete dually fixed in concrete by means of foundation bolts and foundation bolt are merged in concrete , bolt thickness at least 14 mm as shown in drawing	6 No.
3.	B :-- Truss shall be made of ISA 40 x 40 x 5 with 35 x 35 x 5 Support as per shown in drawing dually welded to gather.	3 No.
3.	Purling shall be made of ISA 35 x 35 x 5 or 1.5 mm sheet C purlins.	7 No.
4.	C :-- .5 mm. Corrugated galvanized sheet shall be provided either TATA or NATIONAL brand over truss and purlins with the help of J bolt or popup rivets.	320 Sq. ft. Approximately
5.	Brick Masonry or Pre casted panels for boundary of the shade approx. height 200 mm. from fround.	Throughout periphery
6.	On the base of the floor soft mooram or brick masonry throughout in shade.	300 Sq. ft.
7.	Foundation to install cremation shade	4 No.
8.	Shade I beam , truss purlins clamps shall properly finished and have two coat primer with one coat enamel paint.	----------
9.	Each coloumn shall be fitted with base plate with the trusses and each purlin shall be fitted with trusses by clits.	----------
10	Properly ridging shall be provided on the G.I. Corrugated sheet to avoided leakage.	----------
11.	Each J hook or Pop up Rivets shall be fixed with bitumen and steel washer to avoided leakage.	----------
12	±5% tolerance is provided for overall dimensions and measurements.	----------

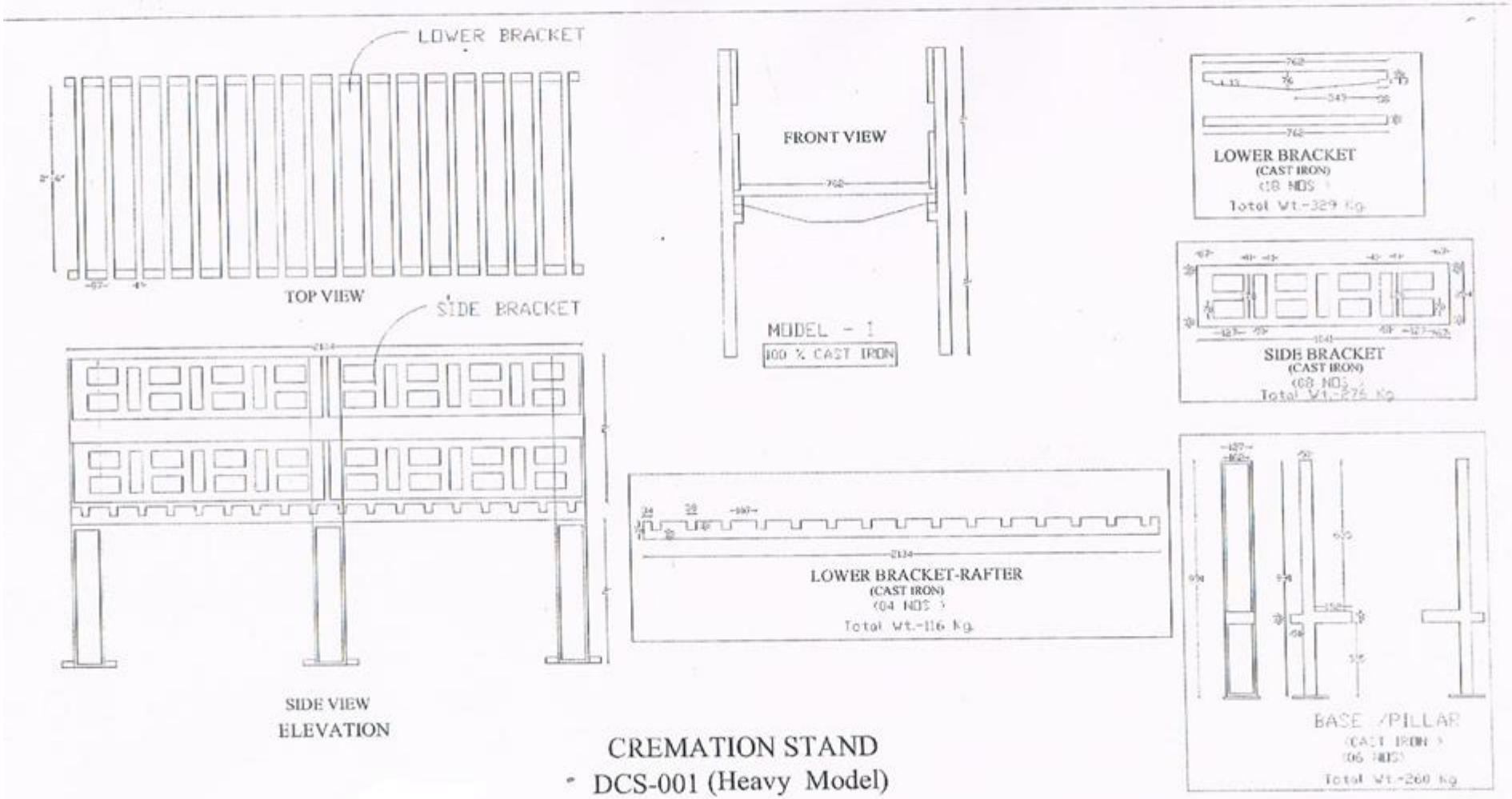

CREMATION STAND
DCS-001 (Heavy Model)
Total Wt.-1050.0 Kg.

Layout Plan of of Pre Fabricated Steel Structure for Chabutara (Rangmanch/Sabha Bawan)

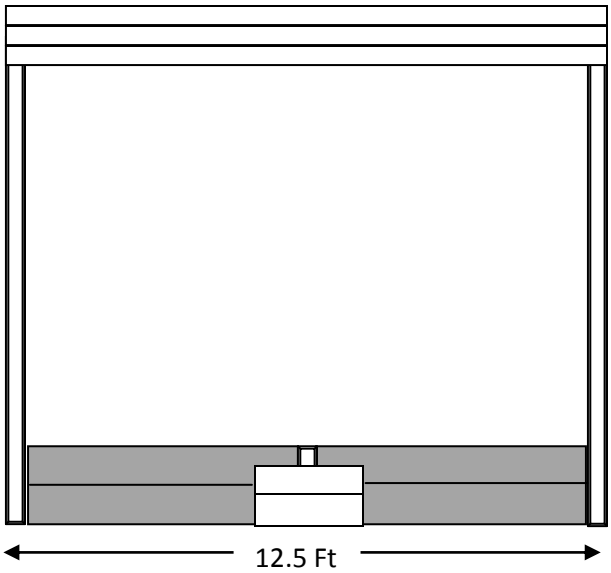

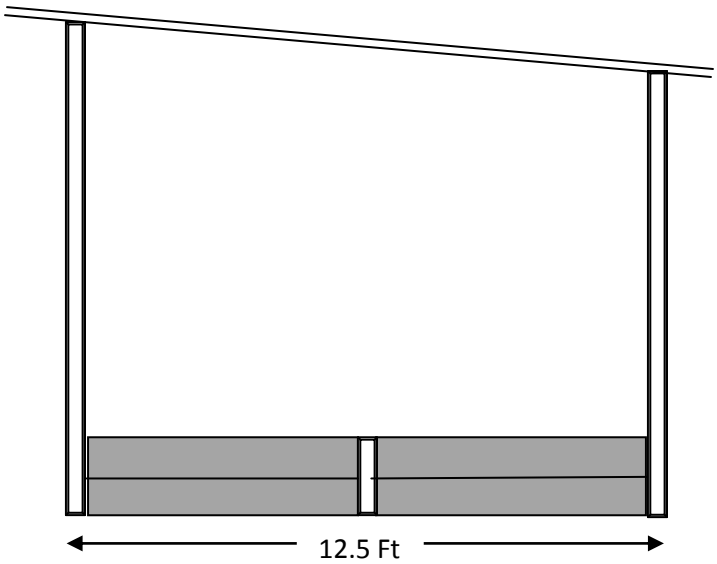

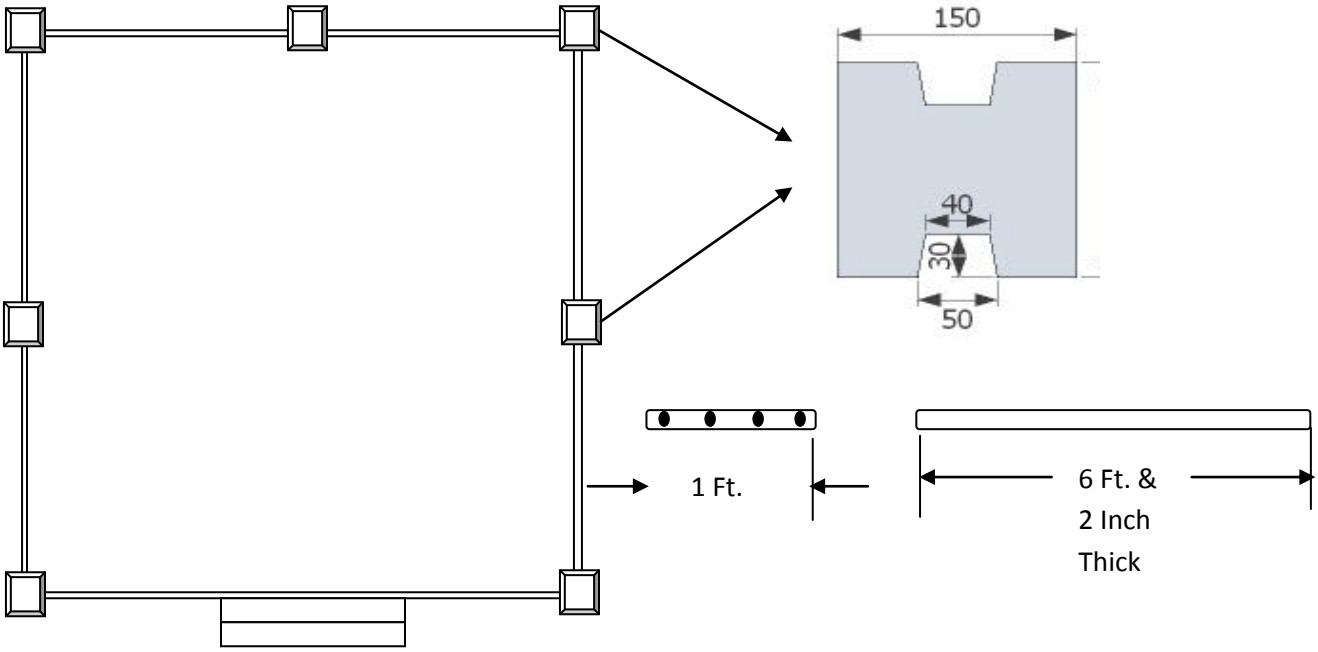

Detail Specifications of Pre fabricated Steel Structure for Chabutra (Rangmanch/Sabha bhawan)

1 A – Prefabricated Coloumns :-- Prestressed prefabricated coloumn shall me made of Concrete 1:2:4 with 7 No. 3 mm. hard wire as shown in drawing.

Or

Square steel tube 100 x 100 mm. 1.6 mm. thick shall used as a coloumn with attachment to fixed prefabricated concrete panels.

2. B – Prefabricated Panels :-- Pre stressed Prefabricated Panels having 4 No. 3 mm. hard wire reinforcement 2 Inch thickness and 6 Ft. long.

3. C -- Truss :-- made of 3 mm. C section

4. **Purlins :--** made of either C section or Z section

5. **Method of fixing of Truss and Purlins :--**

Puling shall fitted with the beam by means of Clit with bolt.

Beam thickness 2 mm.Purlin thickness 1.5 mm.

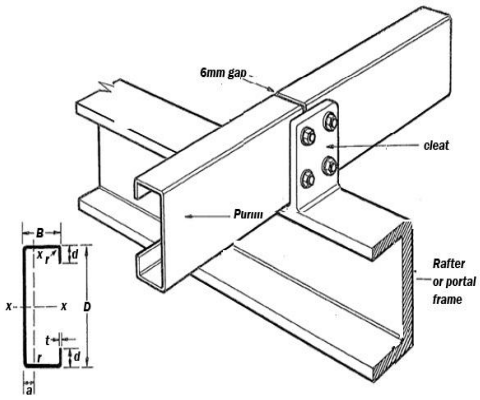

6. Board Exhibited Name of Yojna , Mad and Department :--

Board shall be made of Hollow pipe and 18 SWG. (1.00 mm.) dually welded together.

LFkkuh; {ks= fodkl ;kstuk

7. Glazed Pavers shall be mounted on the floor of the chabutara on the zero metal mixed concrete mixture.

8. Ready made mix paint on the coloumn truss and purlins including structure and Distemper on the precast structure.

Prefabricated three wheeler Rickshaw Type Ambulance

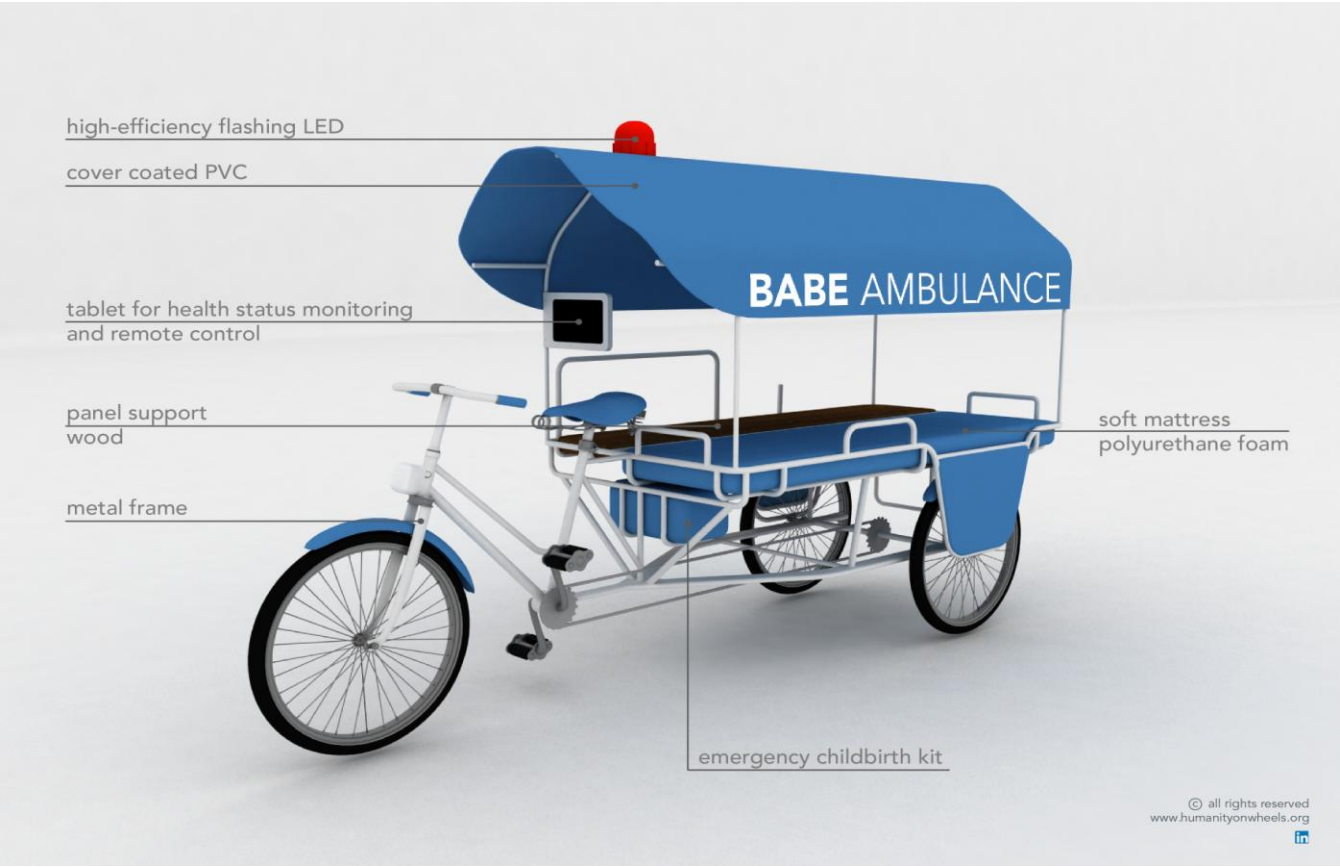

Specification :--

1.	**Wheel base**	**1680 mm.**
2.	**Tyre radius**	**350 mm.**
3.	**Over all length**	**2350 mm.**
4.	**Overall width**	**1350 mm.**
5.	**Chassis as well as body weight**	**118 Kg.**
6.	**Gross vehicle Weight (GVW)**	**318 Kg.**
7.	**Loading capacity**	**2 Patient .**
8.	**Front wheel Tyre tube Assembly**	**1 No. Air**
9.	**Solid tyre based Rear Wheel**	**2 No.**
10.	**Tubular Frame of rickshaw**	**1 No.**
11.	**Mechanical Brake system on rear wheels**	**2 No.**

12. **Stature type adjustable folding bed with cushion on the back side of the rickshaw for maximum two people .**
13. **Proper shock absorber fitted on the front6 side as well as back side of the Rickshaw.**

PRE FABRICATED STEEL STRUCTURE FOR BIKE AMBULANCE Model 1

Tilting arrange. 3 x 1.5 Inch. pipe 2x 1 Inch. pipe Standing arrangement Hitch

Specification :--

1. Chassis of the frame of the side trolley ambulance shall be made of Tube section as shown in the figure.
2. Vertical resting arrangement to place trolley vertical when detached from the bike.
3. Suitable arrangement is shall be provided to affix trolley with the bike.
4. Shelter or shade shall be provided over the trolley for protection of sunlight.
5. Middle portion of the trolley has space to store medicines and other medical equipment.
6. Suitable shock absorber is provided on both of rear wheel of the trolley for cushion.
7. Cushion bed shall be provided on the strture of the trolley for patient.
8. Hinged Frame over structure shall be made of 25 mm. diameter pipe as shown in drawing.

PREFABRICATED STEEL STRUCTURE FOR BIKE AMBULANCE MODEL 2

Specification :--

9. Chassis of the frame of the side trolley ambulance shall be made of Tube section as shown in the figure.
10. 100 cc bike is attached with trolley as shown in drawing.
11. Suitable arrangement is shall be provided to affix trolley with the bike.
12. Shelter or shade shall be provided over the trolley for protection of sunlight.
13. Middle portion of the trolley has space to store medicines and other medical equipment.
14. Extra shock absorber is provided on the front wheel of the bike for extra cushion.
15. Foulding arrangement shall be provided on the middle of the trolley for sitting.

Prefabricated steel structure for Bicycle Ambulance

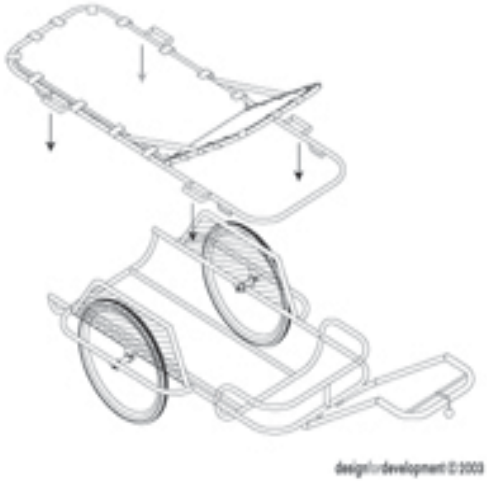

Specification :--

1. Frame of the trolley shall be made of 25 mm. Light duty hollow pipe as per shown in drawing.
2. Two number of Tyre radius 350 mm. are fitted on the trolley.
3. 20 Inch Bicycle with 370 mm. tyre radius with rim assembly.
4. Proper arrangement shall be on the hinge for towing the trolley ambulance to bicycle.
5. Separate streture is placed on the trolley are affix on the trolley for patient.
6. Mud guard or safety guard on the wheel of the trolley shall be provided for safety.

Drawing and Specifications of Precast Boundary Wall

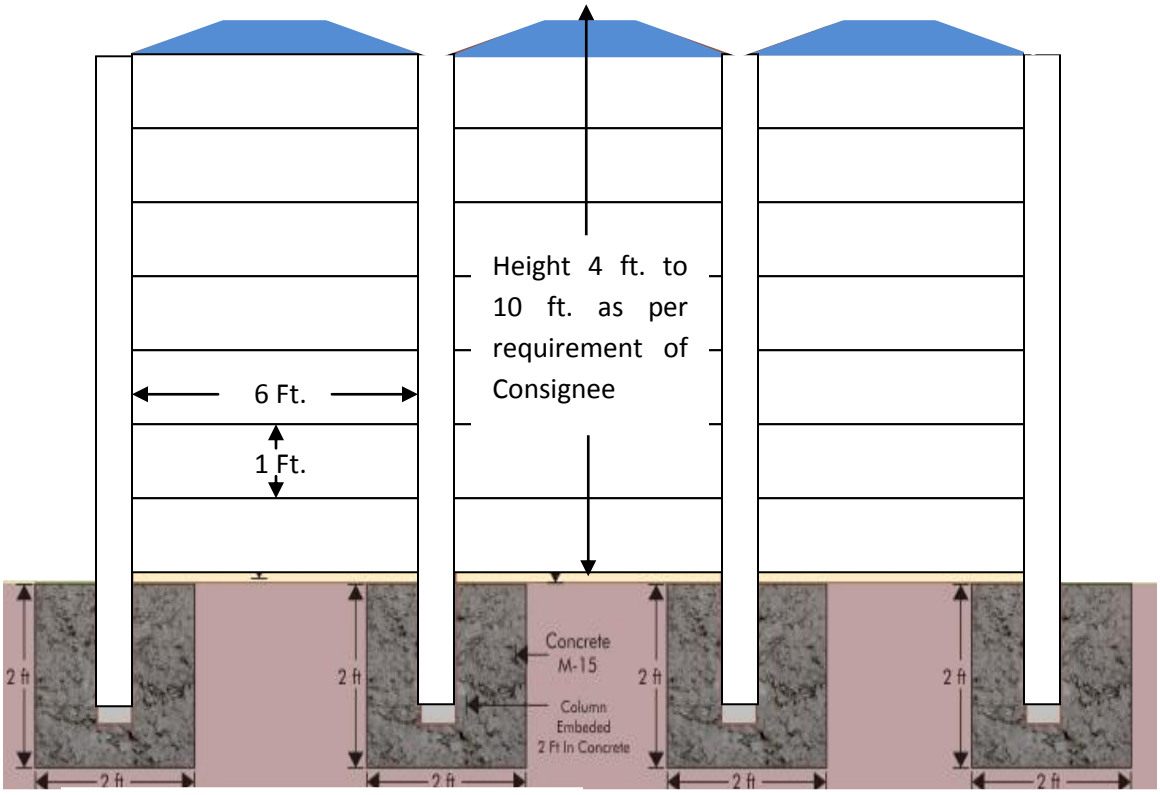

Coloumn Design :--

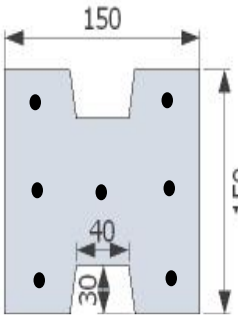

Panel Design :--

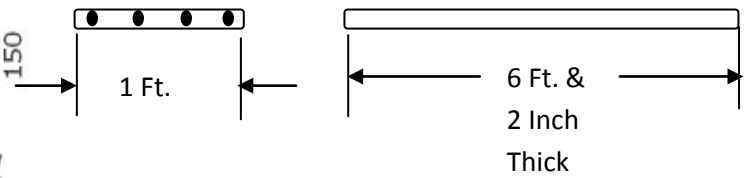

Specifications: -- Both in column and Panel 3 mm. steel wire is pre stressed as per shown in design and casted with M- 15 Concrete and cured with dipping curing.

Prefabricated Goshala Shade (Kanji House)

Specification :--

1. All civil work shall be done by Precast concrete material.
2. Carpet Area of the shade is 30 ft x 40 ft.
3. Super structure shall be made of truss and purlins of steel of suitable section.
4. Center cattle feed structure shall be made of precast concrete material.
5. Roof shall be made of Corrugated colour coated sheet on 1200 Sq. ft. area.
6. 2 No. of gate for entering and exit from the yard.
7. Ramp shall be provided for the cattle.
8. Whole structure shall be colour coated throughout.

Prefabricated steel structure of Over head Retro Reflective Board (Swagat Dwar)

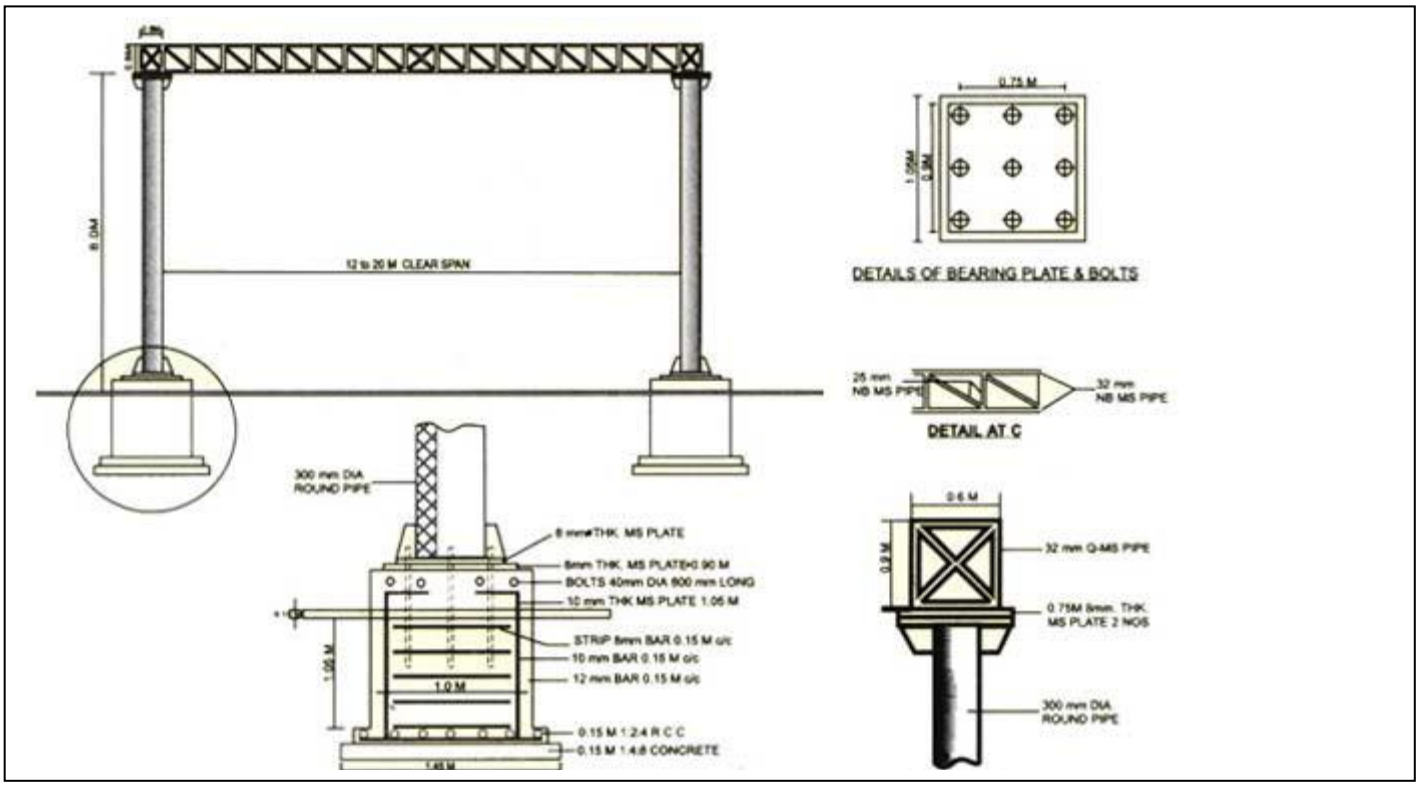

Pre Fabricated Steel Structure of Two Wheel pashu Wahan (Dr.22)

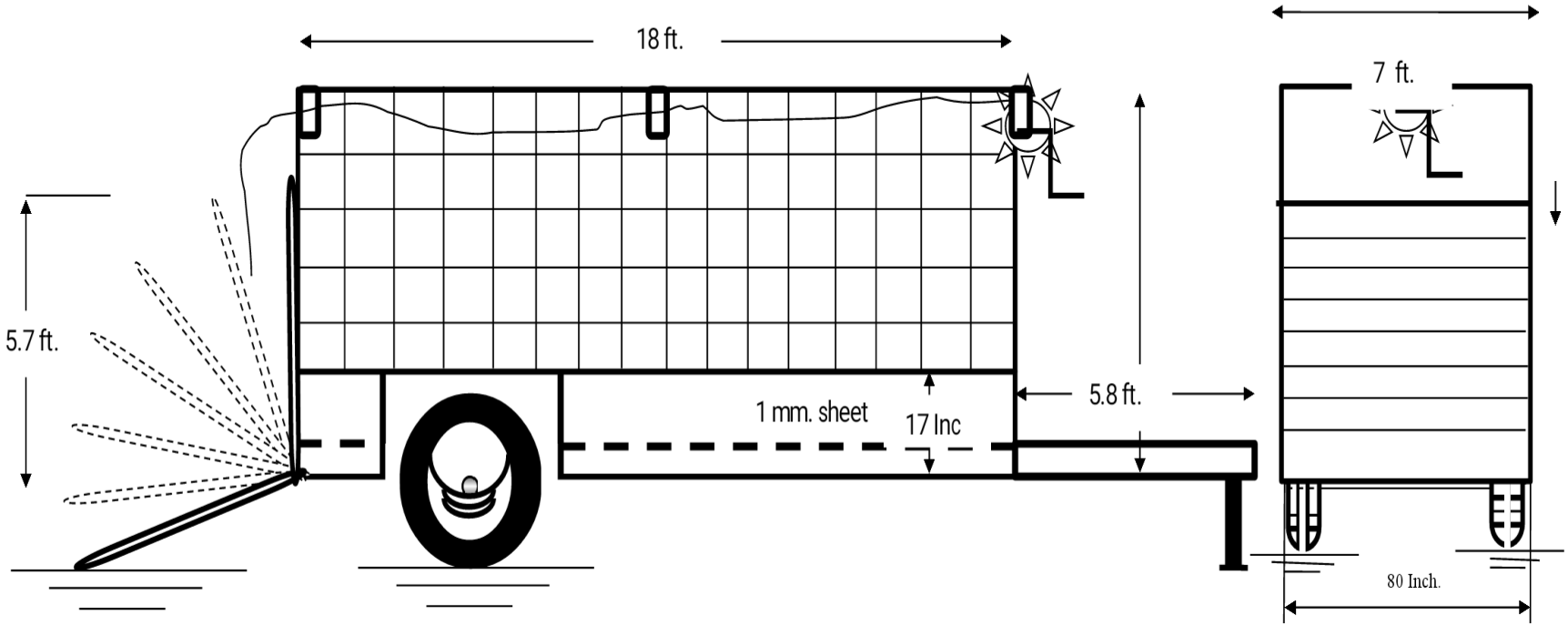

Specification :--

1 Chassis shall be made of !SMC 100 x 50 mm. with Two longitudinal member and 3 Cross barrier with 50 x 50 x 5 I.S.F. through the floor.

2. Floor shall be made of 1.6 mm. M.S. sheet .

3. Two number of Side Board shall ne made of 1.0 mm. M.S. sheet with frame of 35 x 35 x 5 I.S.A. with full cover with square hollow pipe of 25mm.

4. Dala (Falka) shall be made of 1.0 mm. corrugated M.S. sheet fixed with 50 mm square frame hinged with chassis to allow tilting motion from the ground in opening and closing.

5. Tyre, tube, flap are 900 x 16 of slandered make , Double plated rim having thickness 5 mm. , Steel hun 20 mm. thick with 8 hole, 13, 18 No. bearing and 75 mm solid or 85 mm. hollow square tube axle length 80 Inch and leaf spring 49 Inch. length , 70 x 10 mm leaf, 13 leaf are provided.

6. Double Purchase crab winch with 9 mm. wire rope is affix on the front portion of trailer to facilitate cattle to force in the trailer.

Pre Fabricated Steel Structure for Animal Ambulance

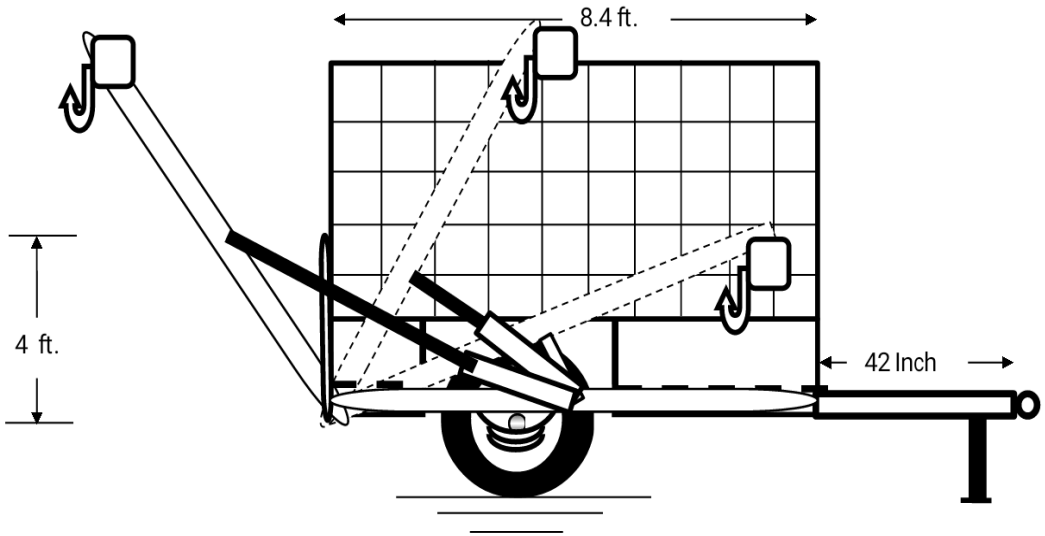

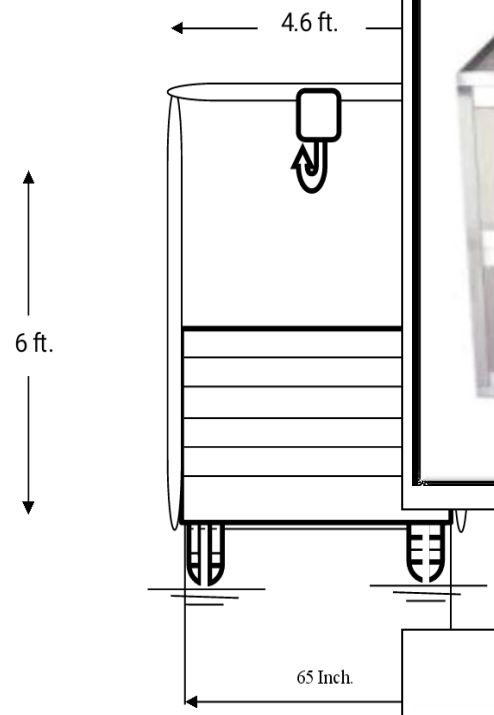

Specification :--

1 Chassis shall be made of !SMC 100 x 50 mm. with Two longitudinal member and 3 Cross barrier with 50 x 50 x 5 I.S.F. through the floor.

2. Floor shall be made of 1.6 mm. M.S. sheet .

3. Two number of Side Board shall ne made of 1.0 mm. M.S. sheet with frame of 35 x 35 x 5 I.S.A. with full cover with square hollow pipe of 25

4. Dala (Falka) shall be made of 1.0 mm. corrugated M.S. sheet fixed with 50 mm square frame hinged with chassis to allow tilting motion fro ground in opening and closing.

5. Tyre, tube, flap are 7.50 x 16 of slandered make , Double plated rim having thickness 5 mm. , Steel hun 20 mm. thick with 8 hole, 13, 18 No. bearing and 63 mm solid or 75 mm. hollow square tube axle length 80 Inch and leaf spring 900 mm. length , 70 x 10 mm leaf, 13 leaf are provi

6. 2 no. of Hydraulic cylinder for load and unload of sick animal by manual or motor pressure followed by manual/motorized hitch to lift the ar

DOUBLE BODY REFRIGERATED MORTURY (coffin box)

1. Thickness of inner body 18 gauge, 304 (food) grade stainless steel.
2. Thickness of outer body 20 gauge, 304 (food) grade stainless steel.
3. Thickness for stretcher of S.steel pipe round or square 18 gauge.
4. Two stretchers provided for lifting body and will of S.S. square or round pipe 18 gauge.
5. Top body rolls on center bearing rolls and bottom body rolls on structure with wheels.
6. 2 Kirloskar compressors model no. KCJ 2612 with 18 months warranty.
7. Remaining temperature accordingly +5°c to -10°c with automatically thermostat-controlled
8. Puff insulation provide low maintenance and long resting drain system for cleaning purposes
9. locked wheels and handles provided for movements
10. length-7 ft 6 inches
    Height-4 feet
    Width-2 feet 6 inches

Refrigerated mortury(coffin box)
Double Body

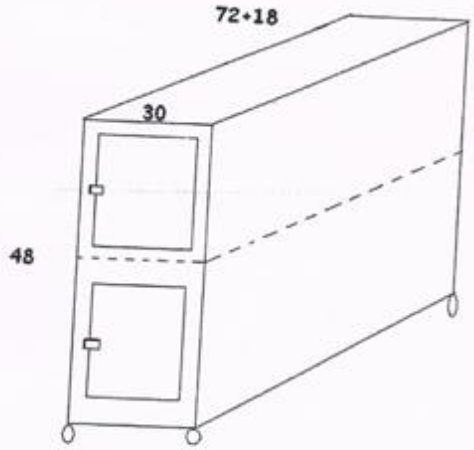

11. Only ms angle frame will be used as bottom frame for mounting the wheels.

Construction	G. I sheet /M.s / 304 stainless Steel
Insulation	High Grade poly Uretherane
Doors	Made of Steel Sheets w/ magnetic Gasket & External Lock
Trolleys	Made of Steel and sliding on telescopic rails
Compressor	ISI Marked & CFC Free
Defrosting type	Automatic
Evaporation	Internal evaporator system Forced draught
Internal drainage	Yes
Integral temp. gauge	Yes
Refrigeration System	Air cooled Hermetically sealed
Air Circulation	Forced air Circulation
Alarm	High / low alarm system
Internal Lighting	Waterproof fluorescent ceiling lamps
Locking System	Standard key Locks
Power Supply	220 Volts/ 50 Hz

Temperature Range and Control Mortuary cabinets shall be with temperature range of 2°C to 8°C and -10°C to -20°C. However mortuary cabinet can also be made with specific temperature range as required by the customer. For accurate measurement and display of temperature a LED or LCD display is used. These units are equipped with microprocessor based digital control panel which is operated with push buttons. For security and safe working high and low temperature alarm system is used.

Refrigeration System

Mortuary cabinets are equipped with full functional cold storage facility. Refrigeration system is energy efficient, environment friendly, completely airtight and can be roof top or wall mounted. This refrigeration system can also be installed as remote equipment where noise or heat can be a nuisance. The evaporator is equipped with automatic electric defrosting. Featuring noise less compressor and air cooled condenser (water cooled condenser on demand) this cooling system provides full value of money.

Construction

Mortuary chambers are of double walled construction and made of 304 grades corrosion resistant stainless steel. For insulation high pressure-injected polyurethane is used for minimizing thermal loss and meeting the particular requirements of refrigeration in mortuaries.

Doors

Doors are made of painted stainless steel and fitted with external lock for security. These doors are situated in front and allows easy loading of trolleys. These doors feature lining in odorless rubber gasket and anti-condensation resistors.

Internal Lighting

Lighting system comes with waterproof fluorescent ceiling lamps which are fitted with a switch on the control panel. **Accessories** Mortuary Fridge / Mortuary Cold Cabinets are supplied with a number of optional accessories to provide easy accessibility of machines. These accessories are: Caters, Stabilizer, Loading Trolley, Instrument Trolley, Data Logger and Temperature Chart Recorder etc. If you need Authorization Certificate it will also be provided on request.

Technical specification:

Number of Bodies	1/2/3/4
Temperature Range	2 C. to 8 C. to -10 C to 20 C.
Temperature Control	Digital Microprocessor
Temperature Display	LED / LCD Display