TENDER DOCUMENT

(Through e-Tendering)

Name of Work : Development of Infrastructure Facility at Kadalukani Para - Phase II, Karette ,Thiruvananthapuram.

NIT NO: HPL/PM (C)/TC/DTPC/2020-21/34 Dated:-22.10.2020

Last submission Date and time of Bid: **29.10.2020** at 15:00 Hrs

Time and date of Opening of Technical Bid **30.10.2020** 15:30 Hrs

ISSUED TO :- _____

_____

HINDUSTAN PREFAB LIMITED
(A Govt. of India Enterprise)
Jangpura, New Delhi-110014
CIN: U74899DL1953GOI002220
Ph- (011) 43149800-899, Fax: (011) 26340365
WEB: **www.hindprefab.in**, Email: **:-** **hindprefab@gmail.com**

HINDUSTAN PREFAB LIMITED
JANGPURA, NEW DELHI- 110014

NOTICE INVITING e-TENDER

1.0 **NIT NO: HPL/PM (C)/TC/DTPC/2020-21/34 Dated:-22.10.2020**

Hindustan Prefab Limited, Project Management Consultant of Principal Client, The Secretary, District Tourism Promotion Council, Thiruvananthapuram invites online "**E-tender"** in two bid system on behalf of **"The Secretary, District Tourism Promotion Council, Thiruvananthapuram"** from the reputed, experienced, technically and financially sound contractors as per the following details:-

Tendering Document No. Name of the Work	**NIT NO: HPL/PM (C)/TC/DTPC/2020-21/34 Dated:-22.10.2020** **Development of Infrastructure Facility at Kadalukani Para - Phase II , Karette ,Thiruvananthapuram**
Estimated Cost Period of Completion	**Rs.170.36 Lakhs** **6 Months**
Earnest Money Deposit	**Rs.3.41 Lakhs**
Non-refundable cost of Tender document	Rs.5900/- in favour of Hindustan Prefab Limited and, payable at Trivandrum.
Name of the party	**HINDUSTAN PREFAB LIMITED**.
Banker	**PUNJAB NATIONAL BANK**
Branch	JANG PURA, BHOGAL, NEW DELHI 110014
Account No	**0147002100044496**
RTGS Code	**PUNB0014700**
Last date & time of submission of online tender	**Up to 29.10.2020 by 3.00 PM (IST)**
Period during which hard copy in Original of EMD, Cost of Tender Document, letter of Acceptance of tender conditions, enlistment order of the contractor and other documents as per NIT shall be submitted.	**Before and up to 3.00 PM on 29.10.2020** in the office of Regional Incharge (S.Z) Hindustan Prefab Limited
Date & Time of Opening of technical tender	**30.10.2020 at 3.30 PM**
Validity of offer	90 days from the date of opening of price tender
Opening of price bid	To be intimated later via email

The tender document can be downloaded from website https://etenders.gov.in/eprocure/app and www.eprocure.gov.in. **"Any Corrigendum/addendum, if any, would appear only on the HPL (CONSULTANT) website and not to be published in any News paper".**

2.0 The intending tenderer must read the terms and conditions of HPL (CONSULTANT) carefully. He should only submit his tender if he considers himself eligible as per eligibility criteria and he is in possession of all the documents required.

3.0 **Those intending tenderers/contractors not registered on the website i.e.** https://etenders.gov.in/eprocure/app**mentioned above If needed they can be imparted training on online tendering process as per details available on the website i.e.** https://etenders.gov.in/eprocure/app**.**

4.0 The intending tenderer must have class-III digital signature to submit the tender.

5.0 The Tender Document as uploaded can be viewed and downloaded free of cost by anyone including intending tenderer. But the tender can be submitted only after uploading the mandatory scanned documents such as (a) Demand Draft/ Pay order or Banker`s Cheque towards cost of tender document, (b) Demand Draft/Pay Order or Banker's Cheque/ Bank Guarantee of any Nationalized or all Commercial Scheduled Bank against EMD & all other documents as per Notice Inviting e-tender.

6.0 Set of Contract / Tender Documents:

The following documents will constitute set of tender documents:-

a) Notice Inviting e-Tender
b) Quoting Sheet for Bidder
c) Technical Sheet
d) Special Conditions of contract
e) List of approved make
f) General Condition of Contract-CPWD
g) Bill of Quantities
h) Tender Drawing
i) Acceptance of Tender Conditions
j) Integrity Pact
k) Corrigendum, if any

7.0 If any problem related to online filling, please contact help desk no.0471-4066026. If not satisfied with help desk response.

8.0 HPL (CONSULTANT) will not responsible for any type of failure of network at contractor end. So you are advised to fill tender with sufficient time in hand to avoid last moment rush.

9.0 Deleted.

10.0 Joint venture is not accepted.

11.0 HPL (CONSULTANT) reserves the right to accept any or reject all the tenders and split up the work among more than one parties without assigning any reasons thereof. HPL (CONSULTANT) reserves the right to terminate the work in between by giving one month notice without any financial liability.

12.0 The tenderers are required to quote strictly as per terms and conditions, specifications, Standards given in the tender documents and not to stipulate any deviations.

13.0 After submission of the tender the tenderer can re-submit revised tender any number of times but before last time and date of submission of tender as notified

14.0 When it is desired by HPL (CONSULTANT) to submit revised financial tender then it shall be mandatory to submit revised financial tender. If not submitted then the tender submitted earlier shall become invalid.

15. 0 On opening date, the tenderers can login and see the tender opening results.

16.0 Contractor can upload documents in the form PDF format.

17.0 Contractor to upload scanned copies of all the documents including valid EPF registration/ESI registration/GST registration, PAN No. as stipulated in the tender document.

18.0 If the contractor is found ineligible after opening of tender, his tender shall become invalid and cost of bid document shall not be refunded.

19.0 If any discrepancy is noticed between the documents as uploaded at the time of submission of tender and hard copies as submitted physically by the contractor the tender shall become invalid and cost of tender document shall not be refunded.

20.0 Notwithstanding anything stated above, HPL (CONSULTANT) reserves the right to assess the capabilities and capacity of the tenderers to perform the contract, in the overall interest of HPL (CONSULTANT). In case, tenderers capabilities and capacities are not found satisfactory, HPL (CONSULTANT) reserves the right to reject the tender.

21.0 In case of Percentage Rate Tender, Contractor must ensure to quote single percentage rate. The column meant for quoting rate in figures appears in pink colour and the moment rate is entered, it turns sky blue, The Rate shall be quoted upto 2 Decimals.

22.0 In case of Item Rate Tender, price shall be entered against each item in the Bill of Quantities / Schedule of Quantities. The cost of item against which the contractor has failed to enter a rate or price shall be deemed to be covered by rates and prices of other items in Bill of Quantities / Schedule of Quantities and no payment shall be made for the quantities executed for items against which rate has not been quoted by the contractor. The column meant for quoting rate in figures appears in pink/yellow colour and the moment rate is entered, it turns sky blue. The Rate shall be Quoted up to 2 Decimals.

23.0 In addition to this, while selecting any of the cells a warning appears that if any cell is left blank the same shall be treated as "0". Therefore, if any cell is left blank and no rate is quoted by the tenderers, rate of such item shall be treated as "0" (ZERO).

24.0 The tenderer if required may submit questions in writing by e-mail at tendercellhpl@gmail.com and **hplsouthengg@gmail.com** to seek clarifications latest by 27.10.2020 to the office of PM (C)-TC at Hindustan Prefab Limited, Jangpura, New Delhi: 110 014 and Regional Incharge (S.Z),Hindustan Prefab Limited, Thiruvananthapuram, Kerala**.** The tenderers are requested to submit their technical and commercial queries separately so that those could be replied suitably.

25.0 Not withstanding anything conspiracy mentioned anywhere in the NIT / contract agreement, it has been understood by the bidder that the Hindustan Prefab Limited has been appointed as consultant by its Principal Client i.e The Secretary, District Tourism Promotion Council, Thiruvananthapuram (Kerala) vide the contract sign on the 20th day of August 2020. HPL is issuing this NIT for and on behalf of The Secretary, District Tourism Promotion Council, Thiruvananthapuram (Kerala). All the payment to the Contractor will be released directly by The Secretary, District Tourism Promotion Council, Thiruvananthapuram (Kerala) to contractor. HPL will not be responsible for any claim / non-payment for whatsoever reason, including any dispute denial, reduction, pre-closure of the contract, loss of profit, interest or any other claim. HPL is being singing the contract as a Consultant.

Prequalification Criteria (PQ)

1.1 INITIAL CRITERIA FOR ELIGIBILITY FOR TECHNICAL BID:-

The applicant should have experience of having successfully completed works during the last seven years ending last day of the month previous to the one in which applications are invited:

(i) Three similar completed works costing each not less than the amount equal to 40% of estimated cost put to tender,

OR

Two similar completed works, each of value not less than 60% of the estimated cost put to tender

OR

One similar completed work of value not than 80% of the estimated cost put to tender

(ii) Similar works shall means civil construction works of buildings including allied plumbing, sanitary & external development works

(iii) The value of executed works shall be brought to current costing level by enhancing the actual value of work at simple rate of 7% per annum; calculated from the date of completion to last date of receipt of applications for tenders

1.3 For this purpose, 'cost of work' shall mean gross value of the completed work including the cost of materials supplied by the Govt./ Client, but excluding those supplied free of cost. This should be certified by an officer not below the rank of Executive Engineer/ Project Manager or Equivalent.

1.4 The applicant should have had average annual financial turnover (gross) of minimum **50%** of total estimated cost put to tender during the last three years ending **31st March 2019.** This should be duly audited by a Chartered Accountant. Year in which no turnover is shown would also be considered for working out the average.

1.5 The applicant should not have incurred any loss in more than two years during the last five years ending **31st March 2019** which should be duly certified by the Chartered Accountant.

1.6 The applicant should have a solvency of **40%** of estimated cost certified by his Bankers. The solvency certificate should not be more than **6 months old.**

1.7 The bidding capacity of the contractor should not be less than the estimated value mentioned in the NIT. The bidding capacity shall be worked out by the following formula:

Bidding Capacity = A*N*2-B

Where:

A = Maximum value of construction works executed (Turnover) in any one year during the last seven years taking into account the completed as well as works in progress.

N = Number of years prescribed for completion of work for which pre-qualification application has been invited.

B = Value of existing commitments and on going works to be completed during the period of completion of work for which pre-qualification has been invited. For working out value of existing commitments, balance portions of on-going works shall be counted.

2.0 The applicant should own construction equipment as per list required for the proper and timely execution of the work, else, he should certify that he would be able to manage the equipment by hiring etc. and submit the list of firms from whom he proposes to hire.

3.0 The applicant should have sufficient number of Technical and Administrative employees for the proper execution of the contract. The applicant should submit a list of these employees stating clearly how these would be involved in this work.

4.0 The applicant's performance for each work completed in the last 7 years and in hand should be certified by an officer not below the rank of Executive Engineer or equivalent and should be obtained in sealed cover.

5.0 EVALUATION CRITERIA FOR PRE-QUALIFICATION

5.1 For the purpose of pre-qualification, applicants will be evaluated in the following manner:-

5.2 The initial criteria prescribed in para 1.1 to 1.7 above in respect of experience of similar class of works completed and financial turnover etc. will first be scrutinized and the applicant's eligibility for pre-qualification for the work be determined.

5.3 The applicants qualifying the initial criteria as set out in para 1.1 to 1.7 above will be evaluated for following criteria by scoring method on the basis of details furnished by them:

a)	Financial strength (Form 'A') –	Max 20 Marks
b)	Experience in similar nature of works during last Seven years (Form 'B') -	Max 20 Marks
c)	Performance on works (Form 'C') -Time over run	Max 20 Marks
d)	Performance on works (Form 'C') -Quality	Max 40 Marks
	Total	100 Marks

To qualify, the applicant must secure at least fifty percent marks in each above & sixty percent marks in aggregate.

The HPL, however, reserves the right to restrict the list of pre-qualified contractors to any number deemed suitable by it.

Marking scheme for evaluation criteria refer to annexure-A

ANNEXURE-A			
S.N.	Attributes	Max. Marks	Evaluation
(a)	Financial Strength	(20 Marks)	(i) 60% marks for minimum eligibility criteria
(i)	Average Annual Turnover	16 Marks	(ii) 100% marks for twice the minimum eligibility criteria or more
(ii)	Solvency Certificate	4 Marks	In between (i) & (ii) – on pro-rata basis
(b)	Experience in similar class of works	(20 Marks)	(i) 60% marks for minimum eligibility criteria
			(ii) 100% marks for twice the minimum eligibility criteria or more
			In between (i) & (ii) – on pro-rata basis
(c)	Performance on works (time over run)	(20 Marks)	
	Parameter	CFP	Score
	TOR = AT/ST, where AT=Actual Time; ST=Stipulated Time.	if TOR=	1.00 2.00 3.00 >3.50
(i)	Without levy of compensation		20 15 10 10
(ii)	With levy of compensation		20 5 0 -5
(iii)	Levy of compensation not decided		20 10 0 0
(d)	Performance of works (Quality)	(40 Marks)	
(i)	Outstanding	40	
(ii)	Very Good	30	
(iii)	Good	20	
(iv)	Poor	0	
Total (100 Marks)			

6.0 FINANCIAL INFORMATION

Applicant should furnish the following financial information: Annual financial statement for the last five year (in Form "A")

7.0 EXPERIENCE IN WORKS HIGHLIGHTING EXPERIENCE IN SIMILAR WORKS

7.1 Applicant should furnish the following:

a) List of all works of similar class (Construction of Building / Housing Project) successfully completed during the last seven years (in form "C")

b) List of the projects under execution or awarded (in Form "D")

7.2 Particulars of completed works and performance of the applicant duly authenticated/ certified by an office not below the rank of Executive Engineer or equivalent should be furnished separately for each work completed or in progress (in Form "E"). **Bidder should note that**

without the duly signed Form "E", Technical evaluation of the bid will not be carried out and their bids will be summarily rejected, for which no separate communication will be made.

7.3 Structure & Organization (in Form "G")

8.0 ORGANISATION INFORMATION

Applicant is required to submit the following information in respect of his organization (in Form "G")

Number of Technical & Administrative Employees in parent company, subsidiary company and how these would be involved in this work (in Form "F")

9.0 CONSTRUCTION PLANT & EQUIPMENT

Applicant should furnish the list of construction plant and equipment including steel shuttering, centering and scaffolding likely to be used in carrying out the work (in Form "H"). Details of any other plant & equipment required for the work (not included in Form "H") and available with the applicant may also be indicated.

10.0 The document submitted by the contractor / construction agency in support of their work experience, financial credential, Income tax return, Turnover etc. should be self attested.

11.0 List of Mandatory Documents to be scanned and uploaded within the period of tender submission.

a) Demand Draft against EMD or Demand Draft & Bank Guarantee against EMD.
b) Demand Draft towards cost of Bid Document.
c) Proof of online electronic transfer receipt of the EMD and tender cost.
d) Certificates of work experience and documents pertaining to Eligibility criteria/NIT.
e) Only certificate issued as per Performa Form-C will be consider for evaluation purposes (No other formats will be consider)
f) Copy of valid EPF Certificate, PAN & Kerala GST registration.
g) Letter of Acceptance of tender conditions unconditional as per tender documents Annexure -I of this NIT.
h) Power of Attorney of the person having Digital Signature for signing/Submitting the bid.
i) From A to E
j) Private works completion certificates should be accompanied with TDS Certificates for each work.
k) Integrity pact must be signed and sealed at the time of uploaded documents.
l) The applicant should have a solvency of 40%. of the estimated cost certified by his bankers The solvency certificate should not be more than 6 months old as on the last date of submission of tender.

12. No hard copy required except EMD cost, Tender cost and Acceptance letter Annexure-I.

13. Price bid will be submitted online only, do not submit hard copy of price bid.

INTEGRITY PACT

BETWEEN

HINDUSTAN PREFAB LIMITED (HPL) hereinafter referred to as **"The Principal"** (which expression, unless repugnant to the context thereof, shall mean and include its legal representatives, heirs and assigns)

AND

……...hereinafter referred to as **"The Bidder/Contractor"** (which expression, unless repugnant to the context thereof, shall mean and include its legal representatives, heirs and assigns)

Preamble

The Principal intends to award, under laid down organizational procedures, contract(s) for **Development of Infrastructure Facility at KadalukaniPara -Phase II ,Karette, Thiruvananthapuram** (hereinafter referred to as the 'Project'). The Principal necessarily requires full compliance with all relevant laws of the land, rules, regulations, economic use of resources and of fairness/ transparency in its relations with its Bidder(s) and/or Contractor(s).

In order to achieve these goals, the Principal will appoint an Independent External Monitor (IEM), who will monitor the tender process and the execution of the contract for compliance with the Integrity Pact by all parties concerned, for all works covered in the Project.

To meet the purpose aforesaid both the parties have agreed to comply this Integrity Agreement (hereinafter referred to as "Integrity Pact" or "Pact"), the terms and conditions of which shall also be read as integral part and parcel of the Tender/Bid documents and Contract between the parties.

NOW, THEREFORE, in consideration of mutual covenants contained in this Pact, the parties hereby agree as follows and this Pact witnesses as under:

Section 1 –Commitments of the Principal

Obligations on Principal

The Employer is committed to follow the principle of Transparency, Equity and Competitiveness in Public Procurement.

(1) The Principal commits itself to take all measures necessary to prevent corruption and to observe the following principles: -

a. No employee of the Principal, personally or through family members or through any other channel, will in connection with the tender for or the execution of a contract, demand, take a promise for or accept, for self or third person, any material or immaterial benefit, which the person is not legally entitled to.

b. The Principal will, during the tender process treat all Contractor(s)/Bidder(s) with equity and reason. The Principal will in particular, before and during the tender process, provide to all Contractor(s)/Bidder(s) the same information and will not provide to any Contractor(s)/Bidder(s), confidential/additional information through which the Contractor(s)/Bidder(s) could obtain an advantage in relation to the tender process or the contract execution.

c. The Principal will exclude from the process all known prejudiced persons. **The Principal shall** obtain bids from **only** those parties who have been short-listed or pre-qualified or

through a process of open advertisement/ web publishing or any combination thereof.

(2) If the Principal obtains information on the conduct of any of its employees, Contractor(s) and/or Bidder(s), which is a criminal offence under the IPC/PC Act, or if there be a substantive suspicion in this regard, the Principal will inform the Chief Vigilance Officer or the principal will take remedial actions as per department/conduct rules and **subject to its discretion,** can **additionally** initiate disciplinary actions.

(3) The Principal will enter into agreements with identical conditions with all Contractor(s)/Bidder(s) **for the different Work Packages in the aforesaid Project**.

(4) The Principal will disqualify from the tender process all Contractor(s)/Bidder(s) with estimated cost of work put to tender of Rs 1.0 Crore and above, who do not sign this Pact or violate its provisions.

Section 2 – Commitments of the Bidder(s) / Contractor(s)

Obligations on Bidder/Contractor

To accept and comply with the Integrity Agreement in letter and spirit and further agree that execution of the said Integrity Agreement shall be separate and distinct from the main contract, which will come into existence when tender/bid is finally accepted by Employer. Duration of the Integrity Agreement shall be in the line with section 8 of the Integrity Agreement.

Bidder/Contractor acknowledge that in the event of breach of the Integrity Agreement Employer shall have unqualified, absolute and unfettered right to take action under section 3.

(1) It is required that each Bidder/Contractor (including their respective officers, employees and sub-contractors) adhere to the highest ethical standards, and report to the Government / Department all suspected acts of fraud **or corruption or Coercion or Collusion** of which it has knowledge or becomes aware, during the tendering process and throughout the negotiation or award of a contract.

(2) The Bidder(s) / Contractor(s) commit**(s)** itself/themselves to take all measures necessary to prevent corruption. He commits himself to observe the following principles during his participation in the tender process and during the contract execution.

(a) The Bidder(s) / Contractor(s) will not, directly or through any other person or firm offer, promise or give to any of the Principal's employees involved in the tender process or the execution of the contract any material or other benefit which he/she is not legally entitled to, in order to obtain in exchange any advantage**,** of any kind whatsoever**,** during the tender process or during the execution of the contract.

(b) The Bidder(s)/Contractor(s) will not enter with other Bidders into any undisclosed agreement or understanding, whether formal or informal. This applies in particular to prices, specifications, certifications, subsidiary contracts, submission or non-submission of bids or any other actions to restrict competitiveness or to introduce cartelization in the bidding process.

(c) The Bidder(s)/Contractor(s) will not commit any offence under the relevant IPC/PC Act. Further the Bidder(s)/Contractor(s) will not use improperly, for purpose of competition or personal gain, or pass on to others, any information or document provided by the Principal as part of the business relationship, regarding plans, technical proposals and business details, including information contained or transmitted electronically.

(d) The Bidder(s) / Contractor(s) of foreign origin shall disclose the name and address of the Agents/representatives in India, if any. Similarly, the Bidder(s) / Contractor(s) of Indian Nationality shall furnish the name and address of the foreign principals, if any. Either the Indian agent on behalf of the foreign principal or the foreign principal directly could bid in a tender but not both. It shall be incumbent on the Indian agent and the foreign principal to Adhere to the relevant guidelines of Government of India, issued from Time to time regarding availing services of Indian Agents for foreign Suppliers.

Further details as mentioned in the "Guidelines on Indian Agents of Foreign Suppliers" shall be disclosed by the Bidder(s) / Contractor(s). Further, as mentioned in the Guidelines all the payments made to the Indian agent/representative have to be in Indian Rupees only.

(e) The Bidder(s) / Contractor(s) will, when submitting his bid, disclose any and all payments he has made, is committed to or intends to make to agents, brokers or any other intermediaries in connection with the award of the contract.

(f) The Bidder(s) / Contractor(s) to disclose any transgression with any other company that may impinge on the anti corruption principle.

(3) The Bidder(s) / Contractor(s) will not instigate third persons to commit offences outlined above or be an accessory to such offences.

(4) The Bidder(s)/Contractor(s) will not, directly or through any other person or firm indulge in fraudulent practice means a willful misrepresentation or omission of facts or submission of fake/forged documents in order to induce public official to act in reliance thereof, with the purpose of obtaining unjust advantage by or causing damage to justified interest of others and/or to influence the procurement process to the detriment of the Government interests.

(5) The Bidder(s)/Contractor(s) will not, directly or through any other person or firm use Coercive Practices (means the act of obtaining something, compelling an action or influencing a decision through intimidation, threat or the use of force directly or indirectly, where potential or actual injury may befall upon a person, his/ her reputation or property to influence their participation in the tendering process).

(6) The Bidder(s)/Contractor(s) signing IP shall not approach the Courts while representing the matters to IEM and he/she will await their decision in the matter.

(7) The Bidder(s)/Contractor(s), in case of sub-contracting, the Principal contractor shall take the responsibility of the adoption of IP by the sub-contractor.

Section 3: Disqualification from tender process and/or exclusion from future contracts.

Without prejudice to any rights that may be available to the Employer under law or the Contract or its established policies and laid down procedures, the Employer shall have the following rights in case of breach of this Integrity Pact by the Bidder(s)/Contractor(s) and the Bidder/ Contractor accepts and undertakes to respect and uphold the Employer absolute right:

(1) If the Bidder(s) / Contractor(s), before awarding the Project or during execution has committed a transgression by violating Section 2 above or in any other form so as to put his reliability or credibility in question, the Principal, at its sole discretion, after giving proper opportunity to the bidders entitled to disqualify the Bidder(s) / Contractor(s) from the tender process or terminate the contract, if already awarded or exclude the

Bidder/Contractor from future contract award processes, for that reason, without prejudice to any other legal rights or remedies available to the Principal under the relevant clauses of GCC/SCC of the tender/contract. The imposition and duration of the exclusion will be determined by the severity of transgression and determined by the Principal. **Such exclusion may be forever or for a limited period as decided by the** Principal**.**

(2) If the Contractor(s)/Bidder(s) has committed a transgression through a violation of any of the terms under Section 2 above or in any other form such as to put his reliability or credibility into question, the Principal will also be entitled to exclude such Contractor(s)/Bidder(s) from future tenders/contract award processes. The imposition and duration of the exclusion will be determined by the Principal, keeping in view the severity of the transgression. The severity will be determined by the circumstances of the case, in particular, the number of transgressions and/or the amount of the damage.

(3) If it is observed after payment of final bill but before the expiry of validity of Integrity Pact that the contractor has committed a transgression, through a violation of any of the terms under Section 2 above or any other term(s) of this Pact, during the execution of contract, the Principal will be entitled to exclude the contractor from further tender/contract award processes.

(4) The exclusion will be imposed for a minimum period of six (6) months and a maximum period of three (3) years.

(5) If the Contractor(s)/Bidder(s) can prove that he has restored/recouped the damage to the Principal caused by him and has installed a suitable corruption prevention system, the Principal may, at its sole discretion, revoke or reduce the exclusion period before the expiry of the period of such exclusion.

Section 4: Compensation for Damages

(1) If the Principal has disqualified the Bidder(s)/Contractor(s) from the tender process prior to the awarding of the Project according to Section 3, the Earnest Money Deposit (EMD)/ Bid Security furnished, if any, along with the offer, as per terms of the Invitation of Tender, shall also be forfeited. The Bidder(s)/Contractor(s) understands and agrees that this will be in addition to the disqualification and exclusion of the Contractor(s)/Bidder(s) as may be imposed by the Principal, in terms of Section 3 above.

(2) If, at any time after the awarding of the Project, the Principal has terminated the contract according to Section 3, or if the Principal is entitled to terminate the contract according to Section 3, the Security Deposit/Performance Bank Guarantee furnished by the contractor, if any, as per the terms of the NIT/Contract shall be forfeited without prejudice to any other legal rights and remedies available to the Principal under the relevant clauses of General/ Special Conditions of Contract.

The Contractor(s)/Bidder(s) understands and agrees that this will be in addition to the disqualification and exclusion of the Bidder(s)/Contractor(s), as may be imposed by the Principal in terms of Section 3 above.

Section 5: Previous transgression

(1) The Bidder(s)/Contractor(s) herein declares that it has committed no transgressions in the last 5 years with any other Company in any country conforming to the anti- corruption approach as detailed herein or with government/ Central Government or State Government or any other Public Sector Enterprise in India that could justify its exclusion from the tender process.

(2) If at any point of time during the tender process or after the awarding of the Contract, it is found that the Bidder(s)/Contractor(s) has made an incorrect statement on this subject, he can be disqualified from the tender process or if, as the case may be, that the Contract, is already awarded, it will be terminated for such reason and the Bidder(s)/Contractor(s) can be black listed in terms of Section 3 above.

(3) If the Bidder/Contractor can prove that he has resorted / recouped the damage caused by him and has installed a suitable corruption prevention system, the Employer may, at its own discretion, revoke the exclusion prematurely.

Section 6: Independent External Monitor / Monitors

(1) The Principal shall, in case where the Project Value is in excess of Rs 1.0 crore and above, appoint competent and credible Independent External Monitor(s) with clearance from Central Vigilance Commission. The Monitor shall review independently, the cases referred to it to assess whether and to what extent the parties concerned comply with the obligations under this Integrity Pact.

(2) In case of non-compliance of the provisions of the Integrity Pact, the complaint/ non-compliance is to be lodged by the aggrieved party with the Nodal Officer only, as shall be appointed by the CMD, HPL. The Nodal Officer shall refer the complaint/ non-compliance so received by him to the aforesaid Monitor.

(3) The Monitor will not be subject to any instructions by the representatives of the parties and will perform its functions neutrally and independently. The Monitor shall report to the Chairman-cum-Managing Director, HPL.

(4) The Bidder(s) / Contractor(s) accepts that the Monitor shall have the right to access, without restriction, all Project documentation of the Principal including that provided by the Contractor. The Contractor will also grant the Monitor, upon his/her request and demonstration of a valid interest, unrestricted and unconditional access to its project documentation. The Monitor is under contractual obligation to treat the information and documents of the Bidder(s) / Contractor(s) with confidentiality.

(5) The Principal will provide to the Monitor, sufficient information about all meetings among the parties related to the Project, provided such meetings could have an impact on the contractual relations between the Principal and the Contractor.

(6) As soon as the Monitor notes, or believes to note, a violation of this Pact, he will so inform the Principal and request the Principal to discontinue and/or take corrective action, or to take other relevant action(s). The Monitor can in this regard submit non- binding recommendations. However, beyond this, the Monitor has no right to demand from the parties that they act in a specific manner and/or refrain from action and/or tolerate action.

(7) The Monitor will submit a written report to the CMD, HPL within 4 to 6 weeks from the date of reference or intimation to it and, should the occasion arise, submit proposals for corrective actions for the violation or the breaches of the provisions of the agreement noticed by the Monitor.

(8) If the Monitor has reported to the CMD, HPL, of a substantiated suspicion of an offence under relevant IPC/PC Act, and the CMD, HPL, has not, within the reasonable time taken visible action to proceed against such offence or reported it to the Chief Vigilance Officer, the Monitor may also transmit this information directly to the Chief Vigilance Officer, HPL.

(9) The word **'**Monitor**'** means Independent External Monitor and includes both singular and

plural forms.

(10) For ensuring the desired transparency and objectivity in dealing with the complaints arising out of any tendering process, the matter should be examined by the full panel of IEMs jointly as far as possible, who would look into the records, conduct an investigation, and submit their joint recommendations to the Management.

(11) IEM should examine the process integrity; they are not expected to concern themselves with fixing of responsibility of officers. Complaints alleging malafide on the part of any officer of the organization should be looked into by the CVO of the concerned organization.

(12) The role of IEM is advisory, would not be legally binding and it is restricted to resolving issued raised by an intending bidder regarding any aspect of the tender which allegedly restricts competition or bias towards some bidders. At the same time, it must be understood that IEMs are not consultants to the Management. Their role is independent in nature and the advice once tendered would not be subject to review at the request of the organizations.

(13) Issues like warranty / guarantee etc. should be outside the purview of IEMs.

(14) The role of the CVO of the organization shall remain unaffected by the presence of IEMs. A matter being examined by the IEMs can be separately investigated by the CVO in terms of the provisions of the CVC Act or Vigilance Manual, If a complaint is received by him/her or directed to him/her by the commission.

Details of Independent External Monitors (IEMs)

Shri Nand Lal Singh,
Spl. (DG) CPWD (Retd.)
Mob:-09830121650
EMAil:-nlsingh3@gmail.com

Section 7 – Criminal charges against violating Bidder(s)/Contractor(s)/ Subcontractor(s)

If the Principal obtains knowledge of conduct of a Bidder/Contractor or any employee or a representative or an associate of a Bidder/Contractor, which constitutes a criminal offence under the IPC/PC Act, or if the Principal has substantive suspicion in this regard, the Principal will forthwith inform the same to the Chief Vigilance Officer, HPL.

Section 8 – Duration of the Integrity Pact

This Pact shall come into force when both parties have legally signed it. The Pact shall expire, in case of the Contractor(s), 2 (two) months after the completion of defect liability period and in case of the unsuccessful Bidder(s), 2 (two) months after the contract for the project has been awarded.

If any claims is made / lodged during this time, the same shall be binding and continue to be valid despite the lapse of this pact as specified above, unless it is discharged / determined by CMD of HPL.

The Bidder(s)/Contractor(s), however, understands and agrees that even upon the completion of the Project and/or the last payment under the Contract having been made, if any transgression/violation of the terms of this Pact comes/is brought to

the notice of the Principal, it may, subject to its discretion, blacklist and/or exclude such Bidder(s)/Contractor(s) as provided for in Section 3, without prejudice to any other legal right or remedy so available to the Principal.

Section 9 – Other provisions

(1) This agreement is subject to Indian Law. Place of performance and jurisdiction is the Registered Office of the Principal, i.e. New Delhi.

(2) Changes and supplements as well as termination notices need to be made in writing.

(3) If the Bidder/Contractor is a partnership or a consortium, this agreement must be signed by all partners or consortium members.

(4) Should one or several provisions of this agreement turn out to be invalid, the remainder of this agreement shall remain valid and binding. In such a case, the parties will strive to come to an agreement in accordance to their original intentions.

(5) Wherever he or his as indicated in the above sections, the same may be read as he/she or his/her, as the case may be.

(6) It is agreed term and condition that any dispute or difference arising between the parties with regard to the terms of this Integrity Agreement / Pact, any action taken by the Principal in accordance with this Integrity Agreement! Pact or interpretation thereof shall not be subject to arbitration

(For & On behalf of the Principal) (For & On behalf of Bidder/ Contractor)

(Office Seal) (Office Seal)

Place-

Date-

Witness 1:

(Name & Address) _____

_____

Witness 2:

_____

(Name & Address)

_____

MEMORANDUM TO FORM OF TENDER

Sl.No	Description	Clause No.	Values/ Description to be applicable for relevant clause(s)
i)	Name of work		Development of Infrastructure Facility at Kadalukani Para - Phase II , Karette, Thiruvananthapuram
	NIT No:		NIT NO: HPL/PM(C)/TC/DTPC/2020-21/34 Dated:- 22.10.2020
ii)	Client/ Owner		The Secretary, District Tourism Promotion Council, Thiruvananthapuram
iii)	Type of Tender		Sealed percentage rate
iv)	Earnest Money	NIT	**Rs. 3.41 Lakhs (Only DD shall be accepted)** from any Nationalised Bank or ICICI, IDBI, HDFC & Axis Bank in India.
v)	Estimated cost	NIT	**Rs.170.36 Lakhs**
vi)	Time for completion of work	NIT	6 Months
vii)	Mobilization advance	10 B(ii) (GCC)	10 % of contract value in three installments.
viii)	Interest rate of Mobilization advance	10 B(ii) (GCC)	**10% (Ten percent) per annum**
ix)	Schedule of rates Applicable		**Estimate is based on DSR 2016 Rates & market rates for non- schedule items**.
x)	Validity of tender		90 days
xi)	Performance Guarantee	1 (GCC)	5.00 % (Five percent) only of contract value at the time of signing of agreement from any Nationalised Bank or ICICI, IDBI, HDFC & Axis Bank in India
xii)	Security Deposit/ Retention Money	1 (A) (GCC)	2.5 % (Two and a Half Percent) only of the contract amount, which shall be deducted in the manner set out in this contract.
xiii)	Time allowed for starting the work		The date of start of contract shall be reckoned from **07th day** After the date of issue of telegram/Letter/Telex/Fax of intent of Acceptance of tender or from the 1st day of handing over of the site, whichever is later.
xiv)	Defect liability period		Five Years from the date of handing over of the work to the client.
xv)	Signing of Contract		The Successful tenderer will have to execute an agreement in stamp paper worth 0.1% of contract agreed amount subjected to maximum of Rs.1,00,000/- in prescribed form.

xvi)	Escalation /Price variation	10CC (GCC)	Escalation /Price variation is not applicable/ payable in this contract. Rates are firm & fixed for the entire contract period including extended period, if any.
xvii)	Specifications to be followed for execution of work (all works)		The work shall be carried out as per latest CPWD specifications with upto date correction slips, which is being followed in Kerala in general as per direction of Engineer-in-charge in addition to the additional technical specifications given in the tender document.
xviii)	INTEGRITY PACT		Integrity Pact mentioned at Pg. 09 to 15 will supersede to the integrity pact mentioned in the general condition of contract (GCC)

Annexure-I

ACCEPTANCE LETTER
TO BE ENCLOSED ALONGWITH EMD IN ENVELOPE – I

Hindustan Prefab Limited
(Address of submission as mentioned in "Notice Inviting Tender")

Name of work : Development of Infrastructure Facility at Kadalukani Para - Phase II , Karette, Thiruvananthapuram

NIT NO: HPL/PM (C)/TC/DTPC/2020-21/34 Dated:-22.10.2020
Sir,

ACCEPTANCE OF TENDER CONDITIONS

1. The tender documents for the work as mentioned in "Memorandum to Form of Tender" have been sold to me/us by Hindustan Prefab Limited and I / we hereby unconditionally accept the tender conditions and tender documents in its entirety for the above work.

2. The contents of the Tender documents (Instructions to the Tenderers) have been noted wherein it is clarified that after unconditionally accepting the tender condition in its entirety, it is not permissible to put any remark(s)/ conditions (s) (except unconditional rebate on price, if any) in the tender enclosed in "Envelope-1" and the same has been followed in present case.

   In case this provision of the tender is found violated at any time after opening "Envelope-I" , I/ We agree that the tender shall be summarily rejected and HPL (CONSULTANT) shall, without prejudice to any other right or remedy be at liberty to forfeit the full said earnest money absolutely.

3. The required earnest money for this work is enclosed herewith.

Yours faithfully,

(Signature of the tenderer)
With rubber stamp

Dated: _____

Instructions to Tenderer (ITT)

Online Percentage rate basis open tenders on behalf of The Secretary, District Tourism Promotion Council, Thiruvananthapuram are invited for the work of "Construction/Development of Infrastructure Facility at Kadalukani Para - Phase II , Karette, Thiruvananthapuram."

1. The work is estimated to cost Rs. **Rs. 170.36 Lakhs** This estimate, however, is given merely as a rough guide.

2. The tender document as uploaded can be seen on website https://etenders.gov.in/eprocure/app.or www.eprocure.gov.in and can be downloaded free of cost.

3. All bidders please visit the site location before submitted the tender.

4. The Pre-qualification / enlistment of the contractors should be valid on the last date of submission of tenders. In case the last date of submission of tender is extended, the pre-qualification of contractor should be valid on the original date of submission of tenders.

5. **Mode of Submission. Earnest Money Deposit**

Earnest Money Deposit of amount as mentioned in "NIT" required to be submitted along with the tender shall be in the form of Demand Draft payable at place as mentioned in NIT in favour of HPL (CONSULTANT) limited from any Scheduled Bank or Bank Guarantee from any Nationalized or all Commercial scheduled banks in the enclosed format. The EMD shall be valid for minimum period of 180 (One Eighty) days from last day of submission of Tender. The EMD shall be scanned and uploaded to the e-Tendering website within the period of tender submission and original should be deposited in office of HPL (CONSULTANT).

The EMD of all unsuccessful tenderers will be returned within thirty (30) days of the Award of the contract to successful tenderer or after the receipt of their BGs verified from the Zonal office of the issuing Bank, whichever is later. No interest will be payable by the HPL (CONSULTANT) on the said amount covered under EMD/Any other Security Deposit. EMD of L-2 party shall be released after award of work to L-1 agency.

6. Interested contractor who wish to participate in the tender has also to make following payments in the form of Demand Draft/Pay Order or Banker's Cheque of any Scheduled Bank and to be scanned and uploaded to the e-Tendering website within the period of bid submission :

Cost of Bid Document- 5900/- in the shape of DD/PO in favour of Hindustan Prefab Limited and, payable at Trivandrum

Demand Draft or Pay Order Banker's Cheque against EMD and Cost of tender Document shall be placed in single sealed envelope superscripted as "Earnest Money", Cost of Tender Document" with name of work and due date of opening of the tender also mentioned thereon.

Copy of pre-qualification/enlistment letter and certificate of work experience (if required) and other documents as specified in the tender shall be scanned and uploaded to the e-Tendering website within the period of tender submission ~~and certified copy of each shall be deposited in a separate envelope marked as "Technical Bid".~~

7. EMD Cost, tender cost and unconditional letter of acceptance shall be placed in envelope with due mention of Name of work, date & time of opening of tenders and to be submitted in the office of HPL (CONSULTANT) after last date & time of submission of tender on **29.10.2020** The documents submitted shall be opened on the next day

Online Technical tender documents submitted by intending tenderers shall be opened only of those tenderers, whose Earnest Money Deposit, Cost of tender Document and other documents placed in the envelope are found in order. The Price tender of those tenderers whose documents found to be in order shall be opened. The date of opening of price tender shall be informed to the tenderer subsequently.

8. The tender submitted shall become invalid if:-

a. The tenderer is found ineligible.

b. The tenderers do not upload all the documents (including Kerala GST Registration) as stipulated in the tender document.

c. If any discrepancy is noticed between the documents as uploaded at the time of submission of tender and hard copies as submitted physically in the office of tender opening authority.

9. VALIDITY OF TENDER

The Tender for the works shall remain open for acceptance for a period of Ninety (90) days from the date of opening of financial tender. If any tenderer withdraws his tender before the said period or issue of letter of acceptance, whichever is earlier, or makes any modifications in the terms and conditions of the tender which are not acceptable to the HPL (CONSULTANT), then the HPL (CONSULTANT) shall, without prejudice to any other right or remedy, be at liberty to forfeit the said earnest money as aforesaid. Further the tenderers shall not be allowed to participate in the retendering process of work.

10. ACCEPTANCE OF TENDER

HPL (CONSULTANT) reserves the right to reject any or all the tenders in part or full without assigning any reason whatsoever. HPL (CONSULTANT) does not bind itself to accept the lowest tender. The HPL (CONSULTANT) reserves the right to award the work to a single party or split the work amongst two or more parties as deemed necessary without assigning any reason thereof. The Contractor is bound to accept the part work as offered by HPL (CONSULTANT) after split up at the quoted/negotiated rates.

11. The tenders shall be strictly as per the conditions of contract. Tenders with any additional condition(s)/modifications shall be rejected.

12. The witnesses to the Tender/Contract Agreement shall be other than the tenderer(s) competing for this work and must indicate full name, address, and status/occupation with dated signatures.

13. The acceptance of tender will rest with the HPL (CONSULTANT) who does not bind itself to accept the lowest tender and reserves to itself the right to reject any or all the tenders received without assigning any reason thereof. Tenders in which, any of the prescribed conditions are not fulfilled or found incomplete in any respect are liable to be rejected.

14. On acceptance of tender, the name of the accredited representative(s) of the contractor who would be responsible for taking instructions from Engineer-in-Charge or its authorized representative shall be intimated by the contractor within 07 days of issue date of letter of awards by HPL (CONSULTANT).

15. The tenderer shall not be permitted to tender for works if his near relative is posted in the project office or concerned Zonal Office of the HPL (CONSULTANT). The contractor shall also intimate the names of persons who are working with him in any capacity or are subsequently employed by him and who are near relatives to any of the officers in HPL (CONSULTANT). Any breach of this condition by the tenderer would render him liable to the withdrawal of the work awarded to him and forfeiture of Earnest Money and Security Deposit. This may also debar the contractor from tendering for future works under HPL (CONSULTANT)

16. The time of completion of the entire work, as contained in contract shall be as mentioned in "**NIT"**, which shall be reckoned from the 07 day after issue of the letter of Award by the HPL (CONSULTANT)

17. Canvassing whether directly or indirectly, in connection with tenderers is strictly prohibited and the tenders submitted by the contractors who resort to canvassing will be liable for rejection.

18. The tender award, execution and completion of work shall be governed by tender documents consisting of (but not limited to) Letter of Award/Letter of work order, Bill of Quantities, Conditions of Contract.

19. The Contractor will not be entitled to lodge any matter for arbitration / recovery against HPL (PMC). HPL (PMC) will solely be responsible for providing professional service as per its consultancy agreement with client.

20. ADDENDA/CORRIGENDA

Addenda/ Corrigenda to the tender documents may be issued prior to the date of submission of the tender to clarify or effect modification in specification and/ or contract terms included in various tender documents. The tenderer shall suitably take into consideration such Addenda/ Corrigenda while submitting his tender. The tenderer shall return such Addenda/ Corrigenda duly signed and stamped as confirmation of its receipt & acceptance and submit along with the tender document. All Addenda/ Corrigenda shall be signed and stamped on each page by the tenderer and shall become part of the tender and contract documents.

21. CLARIFICATION AFTER TENDER SUBMISSION

Tenderer's attention is drawn to the fact that during the period, the tenders are under consideration, the tenderers are advised to refrain from contacting by any means, the HPL (CONSULTANT) and/or his employees/ representatives on matters related to the tender under consideration and that if necessary, HPL (CONSULTANT) will obtain clarifications in writing or as may be necessary. The tender evaluation and process of award of works is done by duly authorized Tender Scrutiny Committee and this committee is authorized to discuss and get clarification from the tenderers.

22. The quantities for some items may not be given in the BOQs, those quantities may be considered as NIL & bidders need not to quote the rates for such items.

23. The condition written elsewhere shall not be considered either for evaluation or as a part of eligibility criteria.

Address:-
Hindustan Prefab Limited
Sunny Lane,TC 27/3126,Palayam
Thiruvananthapuram
Kerala-695034
Tel :- 0471-4066026
Email :- hplsouthnew@gmail.com

Instructions for Online Bid Submission

(Department User may attach this Document as an Annexure in their Tender Document which provides complete Instructions for on line Bid submission for Bidders)

The bidders are required to submit soft copies of their bids electronically on the CPP Portal, using valid Digital Signature Certificates. The instructions given below are meant to assist the bidders in registering on the CPP Portal, prepare their bids in accordance with the requirements and submitting their bids online on the CPP Portal.
More information useful for submitting online bids on the CPP Portal may be obtained at: **https://etenders.gov.in/eprocure/app .**

REGISTRATION

1) Bidders are required to enroll on the e-Procurement module of the Central Public Procurement Portal **(URL: https://etenders.gov.in/eprocure/app)** by clicking on the link "**Online bidder Enrollment**" on the CPP Portal which is free of charge.

2) As part of the enrolment process, the bidders will be required to choose a unique username and assign a password for their accounts.

3) Bidders are advised to register their valid email address and mobile numbers as part of the registration process. These would be used for any communication from the CPP Portal.

4) Upon enrolment, the bidders will be required to register their valid Digital Signature Certificate (Class III Certificates with signing key usage) issued by any Certifying Authority recognized by CCA India (e.g. Sify / nCode / eMudhra etc.), with their profile.

5) Only one valid DSC should be registered by a bidder. Please note that the bidders are responsible to ensure that they do not lend their DSC's to others which may lead to misuse.

6) Bidder then logs in to the site through the secured log-in by entering their user ID / password and the password of the DSC / e-Token.

SEARCHING FOR TENDER DOCUMENTS

1) There are various search options built in the CPP Portal, to facilitate bidders to search active tenders by several parameters. These parameters could include Tender ID, Organization Name, Location, Date, Value, etc. There is also an option of advanced search for tenders, wherein the bidders may combine a number of search parameters such as Organization Name, Form of Contract, Location, Date, Other keywords etc. to search for a tender published on the CPP Portal.

2) Once the bidders have selected the tenders they are interested in, they may download the required documents / tender schedules. These tenders can be moved to the respective 'My Tenders' folder. This would enable the CPP Portal to intimate the bidders through SMS / e-mail in case there is any corrigendum issued to the tender document.

3) The bidder should make a note of the unique Tender ID assigned to each tender, in case they want to obtain any clarification / help from the Helpdesk.

PREPARATION OF BIDS

1) Bidder should take into account any corrigendum published on the tender document before submitting their bids.

2) Please go through the tender advertisement and the tender document carefully to understand the documents required to be submitted as part of the bid. Please note the number of covers in which the bid documents have to be submitted, the number of documents - including the names and content of each of the document that need to be submitted. Any deviations from these may lead to rejection of the bid.

3) Bidder, in advance, should get ready the bid documents to be submitted as indicated in the tender document / schedule and generally, they can be in PDF / XLS / RAR / DWF/JPG formats. Bid documents may be scanned with 100 dpi with black and white option which helps in reducing size of the scanned document.

4) To avoid the time and effort required in uploading the same set of standard documents which are required to be submitted as a part of every bid, a provision of uploading such standard documents (e.g. PAN card copy, annual reports, auditor certificates etc.) has been provided to the bidders. Bidders can use "My Space" or ''Other Important Documents'' area available to them to upload such documents. These documents may be directly submitted from the "My Space" area while submitting a bid, and need not be uploaded again and again. This will lead to a reduction in the time required for bid submission process.

Note: *My Documents space is only a repository given to the Bidders to ease the uploading process. If Bidder has uploaded his Documents in My Documents space, this does not automatically ensure these Documents being part of Technical Bid.*

SUBMISSION OF BIDS

1) Bidder should log into the site well in advance for bid submission so that they can upload the bid in time i.e. on or before the bid submission time. Bidder will be responsible for any delay due to other issues.

2) The bidder has to digitally sign and upload the required bid documents one by one as indicated in the tender document.

3) Bidder has to select the payment option as "offline" to pay the tender fee / EMD as applicable and enter details of the instrument.

4) Bidder should prepare the EMD as per the instructions specified in the tender document. The original should be posted/couriered/given in person to the concerned official, latest by the last date of bid submission or as specified in the tender documents. The details of the DD/any other accepted instrument, physically sent, should tally with the details available in the scanned copy and the data entered during bid submission time. Otherwise the uploaded bid will be rejected.

5) Bidders are requested to note that they should necessarily submit their financial bids in the format provided and no other format is acceptable. If the price bid has been given as a standard BoQ format with the tender document, then the same is to be downloaded and to be filled by all the bidders. Bidders are required to download the BoQ file, open it and complete the white coloured (unprotected) cells with their respective financial quotes and other details (such as name of the bidder). No other cells should be changed. Once the details have been completed, the bidder should save it and submit it

online, without changing the filename. If the BoQ file is found to be modified by the bidder, the bid will be rejected.

6) The server time (which is displayed on the bidders' dashboard) will be considered as the standard time for referencing the deadlines for submission of the bids by the bidders, opening of bids etc. The bidders should follow this time during bid submission.

7) All the documents being submitted by the bidders would be encrypted using PKI encryption techniques to ensure the secrecy of the data. The data entered cannot be viewed by unauthorized persons until the time of bid opening. The confidentiality of the bids is maintained using the secured Socket Layer 128 bit encryption technology. Data storage encryption of sensitive fields is done. Any bid document that is uploaded to the server is subjected to symmetric encryption using a system generated symmetric key. Further this key is subjected to asymmetric encryption using buyers/bid opener's public keys. Overall, the uploaded tender documents become readable only after the tender opening by the authorized bid openers.

7) The uploaded tender documents become readable only after the tender opening by the authorized bid openers.

8) Upon the successful and timely submission of bids (i.e. after Clicking "Freeze Bid Submission" in the portal), the portal will give a successful bid submission message & a bid summary will be displayed with the bid no. and the date & time of submission of the bid with all other relevant details.

9) The bid summary has to be printed and kept as an acknowledgement of the submission of the bid. This acknowledgement may be used as an entry pass for any bid opening meetings.

ASSISTANCE TO BIDDERS

1) Any queries relating to the tender document and the terms and conditions contained therein should be addressed to the Tender Inviting Authority for a tender or the relevant contact person indicated in the tender.

2) Any queries relating to the process of online bid submission or queries relating to CPP Portal in general may be directed to the 24x7 CPP Portal Helpdesk.

****

CORRIGNEDUM TO GENERAL CONDITIONS OF CONTRACT
(G.C.C 2020 Construction Work)

S. No.	For	Read As
1	Chief Engineer/ DG works/ Chief Engineer (Zone)	CMD, HPL (CONSULTANT) for & on behalf of **District Tourism Promotion Council, Thiruvananthapuram**, Govt. of Kerala.
2	Superintending Engineer	General Manager (Engg.)
3	Engineer –in –charge	DGM (C)
4	Department	Hindustan Prefab Limited (Project Management Consultant)
5	Administrative Head	C.M.D., HPL (CONSULTANT)
6.	Owner	**The Secretary, District Tourism Promotion Council, Thiruvananthapuram, Kerala.**
7.	C.P.W.D.	H.P.L.
8.	Dispute Redressal Committee (DRC)	N/A

SCHEDULE 'B' TO 'F'

SCHEDULE – B :

Schedule of materials to be issued to the contractor.

S.No.	Description of Item	Quantity	Rates in figures & words at which the material will be charged to the contractor	Place of Issue
1	2	3	4	5
NOT APPLICABLE				

SCHEDULE 'C'

Tools and plants to be hired to the contractor

S.No.	Description	Hire charged per day	Place of Issue
1	2	3	4
NOT APPLICABLE			

SCHEDULE 'D'

Extra schedule for specific requirements/ document for the work, if any.

Not applicable.

SCHEDULE 'E'

Reference to General Conditions of contract.

Name of Work : Development of Infrastructure Facility at Kadalukani Para - Phase II , Karette ,Thiruvananthapuram.

NIT NO: HPL/PM (C)/TC/DTPC/2020-21/34 Dated:-22.10.2020

Estimated cost of work :		**Rs.170.36 Lakhs**
i)	Earnest money :	**Rs. 3.41 Lakhs**
ii)	Performance Guarantee :	5% of awarded contract amount or estimated cost put to tender whichever is higher.
iii)	Security Deposit :	2.5% (Two point five percent) of the actual gross amount of work done, to be deducted from each bill. EMD amount will be part of security deposit. Security deposit will be refunded to the contractor after successful completion of defects liability period and submission of labour clearance certificate as mentioned in the contract.

SCHEDULE F

GENERAL RULES : Officer inviting tender
& Direction In-Charge Tender Cell, HPL

Maximum percentage for quantity of items of work to be executed beyond which rates are to be determined in accordance with Clauses 12.2 & 12.3 See below

Definitions:

2(v) Engineer-in-Charge	DGM (C)
2(viii) Accepting Authority	AGM (Engg)
2(x) Percentage on cost of material and labour to cover all over needs and profits	15%
2(xi) Standard Schedule of Rates	DSR 2016
2(xii) Department	Hindustan Prefab Limited
9(ii) Standard CPWD contract Form	GCC 2020 Construction Work with up to date corrections and amendments. & CVC guidelines.

Clause 1		
i)	Time allowed for submission of Performance Guarantee from the date of issue of letter of acceptance, in days	At the time or before signing of contract agreement but max within 15 days of award of work
ii)	Maximum allowable extension beyond period provided in i) above in days	NIL
Clause 2	Authority for fixing compensation Under clause 2.	**AGM (Engg.) / The Secretary, District Tourism Promotion Council, Thiruvananthapuram, Kerala.**
Clause 2A	Whether Clause 2A shall be applicable	: Not applicable.
Clause 5	Number of days from the date of issue of letter of acceptance or from the first date of handing over of site (whichever is later) for reckoning date of start	: 07 days
Clause 6,6A	Clause applicable – (6 or 6A)	6 A

Mile Stone(s) as per table given below:

S. no.	**Description of Milestone (Physical)**	**Time allowed in days (From Date of start)**	**Amount to be with-held in case of non achievement of milestone.**
1	1/8th (of total work)	1/4th (of total work)	In the event of not achieving the necessary progress as assessed from the running payment , 1% of the tender value of work will be withheld for failure of each milestone
2	3/8th (of total work)	1/2th (of total work)	
3	3/4th (of total work)	3/4th (of total work)	
4	Full	Full	

PROFORMA OF SCHEDULES Clause 5 Schedule of handing over of site

Part	Portion of site	Description	Time Period for handing over reckoned from date of issue of letter of intent.
Part A	Portion without any hindrance	Complete site available	7 Days
Part B	Portions with encumbrances	-	-
Part C	Portions dependent on work of other agencies	-	-

Time allowed for execution of work	6 Months
Authority to give fair and reasonable Extension of time for completion of work	**A.G.M. (Engg.) / The Secretary, District Tourism Promotion Council, Thiruvananthapuram, Kerala.**
Clause 7 Gross work to be done together with net payment / adjustment of advances for material collected, if any, since the last such payment for being eligible to interim payment.	Rs. 35 Lakhs except in last two bills for which amount may vary.
Clause 7A Whether clause 7A shall be applicable	Yes

Note :- All India Wholesale Price Index issued by Govt. of India and Base Price for the materials covered under Clause 10CA & their corresponding period as issued under the Authority of DG(works) CPWD as valid on last stipulated date of receipt of tender i/c extensions If any shall be applicable.

Base Price of all the materials covered under Clause 10CA is to be mentioned at the time of approval of NIT

Clause 8A Authority to decide compensation on account if contractor fails to submit completion plans	100%
Clause 10A List of testing equipment to be provided by the contractor At site lab but not limited to the followings. 1. Theodolite, Dumpy level, Steel level. 2. Plumb bobs, Sprit level, Hammers. 3. Weighing machine (Electronic) 4. Thermometers, stoves. 5. Hydraulic test machine (compressive testing machine) 6. Smoke test machine. 7. Wire gauge, micro meter & toung tester, megger and others as required at site. 8. Sieves Set 9. All other lab equipments as required to	Yes, to be provided at site.

conduct field lab tests	
Clause 10B Whether Clauses 10 B (ii) shall be applicable	Yes

Modified Provision	
Clause 10CA Materials covered under this clause 1. Cement 2. Reinforcement Bars 3. Structural Steel.	Not Applicable.
Note: - All India Wholesale Price Index issued by Govt. of India and Base Price for the materials covered under Clause 10CA & their corresponding period as issued under the Authority of DG (works) CPWD as valid on last stipulated date of receipt of tender i/c extensions If any shall be applicable. Base Price of all the materials covered under Clause 10CA is to be mentioned at the time of approval of NIT	

Clause 10CC & 10C Clause 10CC to be applicable in contracts with Stipulated period of completion exceeding the Period shown in next column. – exceeding 12 months X_m :- 75% Y_m **:- 25%**	Not Applicable

Note : The awarded rates of the contractor shall be firm & fixed for the entire contract period including extended period if any.

Clause 11 Specifications to be followed for execution of work(all works)	CPWD specifications with all latest amendments and corrections up to date & technical specifications given in the Tender Document.
Clause 12 Authority to decide deviation upto 1.5 times of tendered amount	A.G.M. (Engg.)

12.2 & 12.3 Deviation Limit beyond which clauses 12.2 & 12.3. shall apply for building work :		30%
12.5 (i) Deviation Limit beyond which clauses12.2 & 12.3. shall apply for foundation work (except items mentioned in earth work subhead in DSR and related items)		100%
(ii) Deviation Limit for items mentioned in earth work subhead of DSR and related items		100%
Clause 16 Competent Authority for Deciding reduced rates.		A.G.M. (Engg.)
Clause 18 List of mandatory machinery, tools & plaint to be deployed by the contractor at site but not limited to the followings:-		All tools and plants, machinery, shuttering material, scaffolding material, Grinding machine, cutting machine as required to execute all the items of work under reference within the specified completion period.
Clause 19C Authority to decide penalty for each default		A.G.M. (Engg.)
Clause 19D Authority to decide penalty for each default		A.G.M. (Engg.)
Clause 19G Authority to decide penalty for each default		A.G.M. (Engg.)
Clause 19K Authority to decide penalty for each default		A.G.M. (Engg.)
Clause 25	**DRC Committee**	**Email Address**
Dispute Redressal Committee(DRC)	N/A	

Clause 36(i) Requirement of Technical Representative (s) and recovery rate.

Sl. No.	Minimum qualification of technical Representative	Discipline	Designation (principal Technical/technical Representative)	Minimum Experience	Number	Rate at which recovery shall be made from the contractor in the event of not fulfilling provision of clause 36(i)	
						Figures	Words
1.	Graduate Engineer	Civil	Principal Technical Representative	05 year	01	30,000/- Per month	Thirty thousands Per month
2.	Graduate Engineer Or Diploma Civil Engineer	Civil	Technical representative	01 year 05 year	01	20,000/- Per month For each -Do-	Twenty thousands Per month For each -Do-
3	Graduate Engineer Or Diploma Electrical Engineer	Electrical	Technical representative	01 year 05 year	01	20,000/- Per month For each -Do-	Twenty thousands Per month For each -Do-

Assistant Engineer's retired from Government service that are holding Diploma will be treated at per with Graduate Engineers.

Clause 42 i) (a) Schedule /statement for determining theoretical quantity of cement & bitumen on the basis of Delhi Schedule of Rates	DSR 2016
ii) Variations permissible on theoretical quantities. (a) Cement	2% Plus/ Minus
(b) Bitumen	2.5% Plus only and Nil on minus side
(c) Steel reinforcement and structural steel section for each diameter, section and category.	As per standards code of practice / CPWD Specifications
(d) All other Materials	Nil

RECOVERY RATES FOR QUANTITIES BEYOND PERMISSIBLE VARIATION

Sl. No.	Description of Item	Rates in figures and words at which recovery shall be made from the Contractor	
		Excess beyond permissible variation	Less use beyond the permissible variation
1.	Cement	Nil	Rs. 600 per bag of 50 kg

HINDUSTAN PREFAB LIMITED
JANGPURA, NEW DELHI - 110 014

SPECIAL CONDITIONS OF CONTRACT

These special conditions shall supersede/ supplement the relevant conditions given in CPWD Form 7/8 (Edition 2020 with up to date corrections and amendments) in the tender document.

1. The EMD of all unsuccessful tenderers will be returned within thirty (30) days of the declaration of successful tenderer (L-1). The EMD of L-2 party shall be returned after award of work to L-1 agency. No interest will be payable by the HPL (CONSULTANT) on the said amount covered under EMD/Any other Security Deposit.

2. Contractor shall submit the complete program of construction along with CPM/PERT Chart proposed to be followed for construction within 7 days of award of work.

3. RAW MATERIAL : All materials and labour required for the execution of work shall be arranged bythe contractor including cement & reinforcement steel.

4. (i) The contractor shall procure 43 grade (conforming to IS:8112) ordinary Portland cement, as required in the work, of approved makes as approved by Engineer In- charge Supply of cement shall be taken in 50 kg. bags bearing manufacturer's name and ISI marking, Samples of cement arranged by the contractor shall be taken by the Engineer-in-Charge and got tested in accordance with provisions of relevant BIS codes. In case test results indicate that the cement arranged by contractor does not conform to the relevant BIS codes, the same shall stand rejected and shall be removed from the site by the contractor at his own cost within a week's time of written order from the Engineer-in-Charge to do so.

ii) The cement go-down of the capacity to store a minimum of 500 bags of cement shall be constructed by the contractor at site of work for which no extra payment shall be made. Double lock provision shall be made to the door of the cement go-down. The keys of one lock shall remain with the Engineer-in-Charge or his authorized representative and the key of the other lock shall remain with the contractor. The Contractor shall be responsible for the watch and ward and safety of the cement go-down. The contractor shall facilitate the inspection of the cement go-down by the Engineer-in-charge at any time.

iii) The cement shall be got tested by Engineer-in-charge and shall be used on work, only after test results have been received. The contractor shall supply free of charge the cement required for testing. The cost of tests shall be borne by the contractor.

iv) The actual issue and consumption of cement on work shall be regulated and proper accounts maintained as provided in clause 10 and 10A of the contract. The theoretical consumption of cement shall be worked out as per procedure prescribed in clause 42 of the contract and shall be governed by conditions laid therein.

v) Cement brought to site and cement remaining unused after completion of work shall not be removed from site without written permission of the Engineer-in-charge.

vi) Damaged cement shall be removed from site immediately by the contractor on receipt of a notice in writing from the Engineer-in-charge. If he does not do so within three days of the receipt of such notice, the Engineer-in-charge shall get it removed at the risk & cost of the contractor.

5. i) The contractor shall procure TMT steel reinforcement bars of Fe500 grade conforming to relevant BIS codes of the approved makes / as approved by Engineer In- charge. The contractor shall have to obtain, and furnish test certificates to the Engineer-in-charge in respect of all supplies of steel brought by him to the site of work. Samples shall also be taken and got tested by the Engineer-in-charge as per the provisions in this regard in relevant BIS codes. In case the test results indicate that the steel arranged by the contractor does not conform to BIS codes, the same shall stand rejected and shall be removed from the site of work by the contractor at his cost within a week time from written orders from the Engineer-in-charge to do so.

ii) The steel reinforcement shall be stored by the contractor at site of work in such a way as to prevent distortion and corrosion and nothing extra shall be paid on this account. Bars of different sizes and lengths shall be stored separately to facilitate easy counting and checking.

iii) For checking nominal mass, tensile strength, bend test, re-bend test etc. specimen of sufficient length shall be cut from each size of the bar at random at frequency not less than that specified below :-

Size of bar	For consignment below 100 tonnes	For consignment above 100 tonnes.
Under 10mm dia bars	One sample for each 25 tonnes or part thereof	One sample for each 40 tonnes or part thereof
10mm to 16mm dia bars	One sample for each 35 tonnes or part thereof	One sample for each 45 tonnes or part thereof
Over 16mm dia bars	One sample for each 45 tonnes or part thereof	One sample for each 50 tonnes or part thereof

iv) The contractor shall supply free of charge the steel required for testing. The cost of tests shall be borne by the contractor.

v) The actual issue and consumption of steel on work shall be regulated and proper accounts maintained as provided in clause 10 and 10 A of the contract. The theoretical consumption of steel shall be worked out as per procedure prescribed in clause 42 of the contract and shall be governed by conditions laid therein.

vi) Steel brought to site and steel remaining unused shall not be removed from site without the written permission of the Engineer-in-charge.

6. (a) All material used in the work shall be confirming to IS Specification and as per approved make/brands list and shall be ISI marked unless otherwise specified. In the event for items for which either the brands not specified and ISI marked items not available, the sample of the item before use shall be got approved from Engineer –in-charge. However in either cases the samples of materials / fixtures shall be got approved from Engineer –in-charge before use in the work.

(b) Contractor shall be required to produce samples of all materials and fittings sufficiently in advance for approval. The Contractor when called upon shall provide "make" of samples as per approved list for approval before execution free of cost and also will make arrangements for transportation of samples to the designated test house as per the direction of Engineer-in-charge of the work at his own cost. Cost of testing will also be borne by the contractor.

7. Any notice to be given under this contract shall be sent by registered post, Speed post at the last known registered or head office address of the contractor and shall be deemed to have been effected at the time at which the letter would be delivered in the ordinary course of post.

8. The contractor shall have to provide 5 (five) years guarantee bond in the form of Indemnity Bond for water proofing works from the date of completion of work.

9. The contractor shall be supplied drawings required for execution of work like architectural, structural ,all service plans and other detailed drawings in a phased manner. If any particular drawing is required for execution of work, contractor shall inform the Engineer-in-Charge in writing at least 15 days in advance.

10. The contractor shall be responsible for obtaining necessary clearances for start of work and on completion of work executed by him from various local bodies, Chief Electrical inspector & Chief Fire Officer for occupation of the building. Necessary laisoning with other working agencies & local bodies shall be his responsibility. Any statutory fees to be paid on account of said clearances shall be reimbursed to contractor by HPL (CONSULTANT)/ Client.

11. The mode of payment to Contractors shall be made by our client The Secretary, District Tourism Promotion Council, Thiruvananthapuram, Kerala. as per the Government order No. G.O.(P)No.118/2018/Fin., dated- 03.08.2018.

12. The Contractor should be registered under GST for works in the State of work and submit a copy of registration along with tender. The said GST shall be deducted as per laws at source as applicable. The contractor shall submit the bills as required under GST as applicable.

13. The contractor should have valid PF, PAN, TIN and ESI Registration. & should provide a copy of PF, and ESI Registration. The contractor shall provide the copies of challans as a proof of remittance of PF & ESI amount. The contractor should also maintain the PF records, labour records i.e copies of wage sheets, attendance sheets, monthly returns, annual returns and any other record in this regard for inspection and should provide as and when required by the Engineer-in-charge.

14. **Defect Liability & Maintenance Period:** The contractor shall be fully responsible for the quality, workmanship and structural safety of the construction. The contractor shall be fully responsible for liability of defects in the work executed by him for a period of **5 (Five) years** from the date of successful handing over of the work to Client on rectifying the list of defects/ deficiencies observed by HPL (CONSULTANT)/ Client before taking over. The defect liability period shall start from the date the project is handed over to Client including getting issued the completion and occupancy certificates from the local bodies. All defects observed during the defect liability period shall be rectified by the contractor at his own cost and expenses. Any major and minor repair will be done by the contractor free of cost for one year after handing over the building. In the event of part of the contractor to rectify the defects, the same may, without prejudice to any other right rectified by HPL for and on behalf of Contractor.HPL shall have

the right to deduct or set off the expenses incurred by it in rectifying the defects as aforesaid from/against any amount due and payable or becoming due and payable by HPL to the contractor under this agreement or any other Contract what-so-ever. During the Defect- liability period contractor has to depute an engineer (if required) to look after the defects for which nothing extra would be payable to the contractor.

15. The contractor will be responsible for obtaining "Contractor All Risk Policy" towards entire cost of the work and will obtain "Workmen compensation policy" at his own cost. The policy should cover entire tenure of contract inclusive of extended period, if any.

16. The decision of **The Secretary, District Tourism Promotion Council, Thiruvananthapuram, Kerala.**, regarding the quantum of rates reduction as well as justification thereof in respect of final for sub standard work will be and would not be open to arbitration and adjudication.

17. The contractor has to control noise and air pollution at site as per norms of Pollution Control Board/Local Authorities.

18. The contractor will be responsible to get register himself under labour cess in "Building and other construction workers" welfare board.

19. No extra payment shall be made to the contractor for laying of concrete by ready mixed concrete (R.M.C) plant.

20. No advance shall be paid to the contractor against any Tools & Plants, equipment & machinery etc. brought at site by the contractor.

21. The contractor shall build and complete a mock up room, within the limits of area of the building under construction before progressing for further finishing/ works.

22. The work may be inspected by Central Vigilance Commission and any deductions/ compensation proposed by CVC or HPL (CONSULTANT)/ The Secretary, District Tourism Promotion Council, Thiruvananthapuram, Kerala in regard of defective work or work not confirming to specification, loss of time, amount shall be deducted from his duties.

23. FURNISHED OFFICE ACCOMODATION & MOBILTIY AND COMMUNICATIONTO BE PROVIDED BY CONTRACTOR TO HPL (CONSULTANT).

a) The successful tenderer has to provide the following facilities at site for smooth execution of the project at no extra cost to HPL (CONSULTANT)/ Clients. All the facilities including consumables are to be kept intact till completion and handing over of the project/ works. Successful tenderer shall provide a suitable furnished office accommodation for approximately **200 Sqft. area** as per approved drawing by HPL (CONSULTANT) at site with toilet facility, and drinking water. One desktop/ laptop computer with advanced software including printer, Scanner and Internet connection. The tenderer shall provide transportation facilities at site limited to **Rs.15,000/-** per month for the approved contract period.

b) The tenderer shall make sufficient arrangement for photography/ videography preferably by maintaining the camera/video camera at site so that photographs/ video films can be taken of any specific activity at any point of time. The contractor shall provide consumable as required and maintain the aforesaid facilities intact / operational during the tenancy of the contract including extended contract period, if any.

24 The contractor shall make all arrangements for ground breaking Ceremony / inaugural function etc. for the projects as required and the cost towards it is deemed to be included in his rates/offer. Any expenditure on this account to be incurred by HPL (CONSULTANT)/ The Secretary, District Tourism Promotion Council, Thiruvananthapuram, Kerala shall be recovered from the Contractor.

25 HPL (CONSULTANT) and The Secretary, District Tourism Promotion Council, Thiruvananthapuram, Kerala shall not supply or procure any material for use on works and the contractor has to make his own arrangements for supplying, procuring transportation and storage of all such materials required for the work, at his own cost.

26. Settlement of Disputes and Arbitration:

Notwithstanding anything contrary mentioned anywhere in the NIT / contract agreement, it has been understood by the bidder that the Hindustan Prefab Limited has been appointed as consultant by its Principal Client The Secretary, District Tourism Promotion Council, Thiruvananthapuram, Kerala vide the contract sign on the 4th day of February 2020. HPL (CONSULTANT) is issuing this NIT for and on behalf of The Secretary, District Tourism Promotion Council, Thiruvananthapuram, Kerala. All the payment to the Contractor will be released directly by The Secretary, District Tourism Promotion Council, Thiruvananthapuram, Kerala to Contractor. HPL (CONSULTANT) will not be responsible for any claim / non-payment for whatsoever reasons, including any dispute denial, reduction, pre-closure of the contract, loss of profit, interest or any other claim. HPL (CONSULTANT) being signing the contract as a Consultant / Agent, the Contractor will not be entitled to lodge any matter for arbitration / recovery against HPL (CONSULTANT). HPL (CONSULTANT) will solely be responsible for providing professional service as per its consultancy agreement with client.

27 It is clearly agreed and understood by the tenderers/ contractors that notwithstanding any thing to the contrary that may be stated in the agreement between HPL (CONSULTANT) & the Contractor. Any delay in the release of payment by The Secretary, District Tourism Promotion Council, Thiruvananthapuram, Kerala, Contractor shall not entitle any compensation / interest from The Secretary, District Tourism Promotion Council, Thiruvananthapuram, Kerala and HPL (CONSULTANT).

28. The contractor will have to submit a no claim / final claim certificate, duly notarized on a stamp paper of appropriate value, as per the prescribed format of HPL (CONSULTANT), while release of security deposit by The Secretary, District Tourism Promotion Council, Thiruvananthapuram, Kerala,.

TAXES AND DUTIES

29. The bidder should quote the rates inclusive of all taxes as applicable in the state including GST, In the event of non payment / default in payment of any octroi, royalty, cess, turnover tax, GST, including the purchase tax, consignment tax or any labour dues and E.P.F. etc, by contractor, the HPL (CONSULTANT) reserves the right to withhold the dues / payments of contractor and make payment to local / state / Central Government authorities or to labours as may be applicable.

30. Deleted.

31. Deleted.

32. The contractor shall be responsible for obtaining Completion Certificate and Occupancy Certificate from the local body / bodies. The project shall be deemed to have been completed in relation to contractor only when these certificates are obtained from the local body/ bodies and handed over to the Owner. The contractor shall send completion report along with above certificates as well as "As Built" drawings and maintenance schedules to the office of the HPL (CONSULTANT) / Owner within 15 days from completion of work.

33. Deleted.

34. Deleted.

35. Deleted.

36. The contractor shall not stake any claim in case the HPL (CONSULTANT) / The Secretary, District Tourism Promotion Council, Thiruvananthapuram, Kerala, decides for foreclosure of the work at any of the stages subsequent to start of work in respect of the services based on the agreement.

37. The contractor shall obtain the labour license, within one month of award of work.

38. The specialized items of work are to be got executed by the contractor engaging the agencies who are experienced in carrying out those specialized items of work duly approved by Engineer-In-charge.

39. Performance Guarantee @ 5% (Five percent) of awarded contract value shall be submitted by the contractor in favour of The Secretary, District Tourism Promotion Council, Thiruvananthapuram, Kerala, within the time schedule as specified in the tender document in the shape of Performance Bank Guarantee issued by any Nationalised Bank or ICICI, IDBI, HDFC & Axis Bank. Performance Guarantee in any other shape shall not be accepted.

A) Security deposit @2.5% shall be deducted from the bills of the Contractor in cash. Security deposit shall be refunded to the contractor after satisfactory completion of defects liability period and obtaining of labour clearance certificate from the labour department office.

40. Deleted.

41. For deviation in quantities beyond the limit specified in Schedule 'F', the rates of the deviated quantities payable to the contractor shall be lowest of the rates of contract items, market rate of the item worked out based on market rate analysis and the DSR'2016 rate updated with applicable cost index in case of scheduled items. For Non-schedule items, it shall be lower of the contract item rate and market rate as analysed.

42. For extra items, the rates payable to the contractor shall be lower of the market rate of item as per analysis of rates based on market rate and DSR'2016 item rate updated with applicable cost index (in case of scheduled items). For Non-schedule items, it shall be based on the market rate analysis as worked out. For market rates, Contractors have to submit rate analysis of items with GST Invoices/firm Quotations in support.

43. The estimate is based on DSR-2016 rates and market rates for the some of the Non-schedule items.

44. For schedule items, items no's, description or nomenclature of the items or unit of the items given in financial bids are based on DSR'2016. If there is any error or discrepancy in the above w.r.t as given in DSR'2016, the same shall be regulated as given in DSR'2016.

45. During the various stages of execution, the Contractor shall submit monthly progress report along with six or more different photographs of the project/work. The photographs must be of good quality and its size should not be less than 4" X 6".

46. The contractor shall be solely responsible for execution of work with proper workmanship and as per the specifications.

47. On completion of the work, the work shall be handed over to the client including all services and facilities constructed in accordance with the approved plans, specification fulfilling all techno functional requirement along with inventory, "As Built drawings", maintenance manual/standard operating procedure (SOP) for equipments and plants and all clearance/certificates from statuary authorities, local bodies complete in all respects.

48. Any amount/Penalty imposed/deducted by The Secretary, District Tourism Promotion Council, Thiruvananthapuram, Kerala, for whatsoever reason will be automatically liable to be deducted/ recovered from the contractor dues.

Terms of Payment

49. Hindustan Prefab Limited will prepare the bill of quantities of works, certify the bills of the Contractors and recommend for payments to our client.

50. Bills/Tax Invoices should be prepared by Contractor in the name of our client "The Secretary, District Tourism Promotion Council, Thiruvananthapuram, Kerala,"

51. Our Client "The Secretary, District Tourism Promotion Council, Thiruvananthapuram, Kerala," shall be responsible for all financial handling of Contractors and Hindustan Prefab Limited will not responsible for Contractor liability and any tax compliances.

52. All statutory payments and deductions such as Income Tax (TDS), GST (TDS), Workers Welfare Fund and any other statutory payments shall be recommended to The Secretary, District Tourism Promotion Council, Thiruvananthapuram, Kerala, to be deducted from the bills by the HPL (CONSULTANT) for remittance purpose to concern departments.

52. Security Deposit/Retention Money deductions shall be recommended to The Secretary, District Tourism Promotion Council, Thiruvananthapuram, Kerala, be deducted from the bills by HPL (CONSULTANT). This amount will be released by The Secretary, District Tourism Promotion Council, Thiruvananthapuram, Kerala, after completing the Defects Liability Period.

53. In HPL (CONSULTANT) books of Accounts, HPL (CONSULTANT) will not book the turnover and expenditure of The Secretary, District Tourism Promotion Council, Thiruvananthapuram, Kerala, HPL (CONSULTANT) as legal entity will not recognize the liability of the tenderers/ contractors and tenderers/ contractors cannot recognize HPL (CONSULTANT) as Debtors.

54. The Performance Bank Guarantee and Security Deposit will be released by the Secretary, District Tourism Promotion Council, Thiruvananthapuram, Kerala by fulfilling the following criteria:

A. Performance bank guarantee will be released to the contractor on compliance of the followings:-

a) Completion & handing over of work in all respect to HPL/Client.
b) Rectification of all defects as points out & obtaining "No defects Certificate" from HPL /Client.
c) Obtaining all approvals /NOCs/Clearances and Occupancy certificate from concerned local authorities on completion of work.
d) Preparation & submission and acceptance of final bill.
e) Finalisation of final extension of time by HPL/Client.
f) Obtaining labour clearance certificate from the concerned local authorities..
g) Clearance of site.
h) Submission of labourer's wages sheets, ESIC & EPF contribution challans etc. complete.
i) Submission of 'No Claim/No dues certificate' by the contractor on non-judicial stamp paper duty notarised.
j) Submission of 'As built drawings, Warrantee /Guarantee cards of all equipments/machinery and submission of standard operating manuals.

B. Security Deposit- Security deposit @2.5% of the gross amount of each & every bill will be deducted in cash and will be released to the contractor after satisfactory completion of defects liability period. Amount of security deposit will not be released against submission of bank guarantee. No interest will be payable to the contractor on security deposit amount. Security deposit amount will be released on compliance of followings by the contractor:

a) Completion & handing over of work in all respect to HPL/Client.
b) Rectification of all defects as points out & obtaining "No defects Certificate" from HPL /Client.
c) Obtaining all approvals /NOCs/Clearances and Occupancy certificate from concerned local authorities on completion of work.
d) Preparation & submission and acceptance of final bill & receipt of payment of final bill from the client.
e) Finalisation of final extension of time by HPL/Client.
f) Obtaining labour clearance certificate from the concerned local authorities.
g) Clearance of site.
h) Submission of labourer's wages sheets, ESIC & EPF contribution challans etc. Complete.
i) Submission of 'No Claim/No dues certificate' by the contractor on non-judicial stamp paper duty notarised.

Annexure - X

Notice for appointment of Arbitrator

To

The Secretary,
District Tourism Promotion Council,
Thiruvananthapuram,
Kerala,

Dear Sir,

In terms of clause --- of Special Condition of Contract (SCC), I/we hereby give notice to you to appoint an arbitrator for settlement of disputes mentioned below:

1. Name of applicant
2. Whether applicant is Individual/Prop. Firm/Partnership Firm/Ltd. Co.
3. Full address of the applicant
4. Name of the work and contract number in which arbitration sought
5. Contract amount in the work
6. Date of contract
7. Stipulated date of initiation of work
8. Stipulated date of completion of work
9. Actual date of completion of work (if completed)
10. Total number of claims made
11. Total amount claimed
12. Date of submission of final bill (if work is completed)
13. Date of payment of final bill (if work is completed)
14. Amount of final bill (if work is completed)
15. Date of request made to Secretary for decision
16. Date of receipt of Secretary decision
17. Date of appeal to you
18. Date of receipt of your decision.

Specimen signatures of the applicant (only the person/authority who signed the contract should sign)

I/We certify that the information given above is true to the best of my/our knowledge. I/We enclose following documents.

1. Statement of claims with amount of claims.

Yours faithfully,
(Signatures)

Copy in duplicate to:

1. The Engineer-in-charges

PROFORMA FOR BANK GUARANTEE IN LIEU OF EARNEST MONEY

(On Non-Judicial Stamp Paper to be stamped in accordance with stamp act, the stamp paper to be in the name of Executing Bank)

Ref. : Date :

Bank Guarantee No. …….

The Secretary,
District Tourism Promotion Council,
Thiruvananthapuram,
Kerala,

Dear Sirs,

In consideration of The Secretary, District Tourism Promotion Council, (hereinafter called the "client" which expression shall unless repugnant to the subject or context include its successors and assigns) having issued Notice Inviting Tender No……. M/s …….. having its Registered Office at ……. (hereinafter called the "Tenderer" who wishes to participate in the said tender for ……. and you, have agreed to accept an irrevocable and unconditional Bank Bid Guarantee for and amount of Rs……. valid up to …… on behalf of the tenderer in lieu of cash Deposit required to be made by the tenderer, as a condition precedent for participation in said tender.

We, the …… Bank incorporated under …… law and having one of our branches at …….. and having our Registered office/ Head office at …… do hereby unconditionally and irrevocable guarantee and undertake to pay to the "Client" immediately on demand without any demur reservation, protest, contest, and recourse to be extent of the said sum of Rs…… (Rs……only).

Any such claim/ demand made by the said "Client" on us shall be conclusive and binding on us irrespective of any dispute or difference raised by the tenderer. This guarantee shall be irrevocable and shall remain valid up to …….. If any further extension of this guarantee is required, the same shall be granted to such required period on receiving instructions from M/s …… on whose behalf this guarantee is issued.

We the said Bank undertake not to revoke this guarantee during its currency except with the previous consent of the employer in writing and agree that any change in the constitution of the said tenderer or the said Bank shall not discharge our liability hereunder. In witness whereof the Bank, through its authorized officer, has set its hand and stamp on this …… day of
……. 2006 at……..

WITNESS :

1. (SIGNATURE) (SIGNATURE)

(NAME)…….. (NAME)……

(Designation with Bank Stamp)……..

(OFFICIAL ADDRESS) ATTORNEY AS PER
POWER OF ATTORNEY NO……

…… DATE ……..

2. (SIGNATURE)

(NAME)

(OFFICIAL ADDRESS)

…….

…….

NOTE :

1. The stamp papers of appropriate value shall be purchased in the name of "Issuing Bank". The Guarantee shall be valid up to 90 days from the date of opening of Financial Bid.

G.C.C. 2020 (CPWD) Construction Work (Edition 2020 with up to date corrections and amendments)

FORM 'A'

FINANCIAL INFORMATION

Financial Analysis - Details to be furnished duly supported by figures in balance sheet/ profit & loss account for the last five years duly certified by the Chartered Accountant, as submitted by the applicant to the Income Tax Department (Copies to be attached)

	YEARS				
	2014-15	2015-16	2016-17	2017-18	2018-19
I. i) Gross Annual Turnover on construction works					
ii) Profit/ Loss					

II. Financial arrangement with the Financial Institution like over drafts/loan, Bank Guarantee Limit etc. for carrying out the proposed work

III The following certificates are enclosed:

a) Solvency Certificate (not older than six month) from Bankers of Applicant.

b) Current Income Tax Return filed with Income Tax Dept. duly acknowledged (with seal).

Signature of Applicant(s)

Signature of Chartered Accountant with Seal

FORM –'B'

DETAILS OF SIMILAR WORKS COMPLETED DURING THE LAST FIVE YEARS ENDING LAST DAY OF THE MONTH in which tender invited.

S. No	Name of work/ project and location	Owner or sponsoring organization	Cost of work in crores	Date of commencement as per contract	Stipulated date of completion	Actual Date of completion	Litigation /Arbitration pending/ in progress with details*	Name and address /telephone number of officer to whom reference may be made	Remarks
1	2	3	4	5	6	7	8	9	10

*Indicate gross amount claimed and amount awarded by the Arbitrator.

Signature of Applicant(s)

FORM 'C'

PERFORMANCE REPORT OF WORKS REFERRED TO IN FORM "B" & "C"

1. Name of the firm/ Contractor:

2. Name of work/Project & Location:

3. Type of building:

4. Agreement No.

5. Estimated Cost:

6. Tendered Cost:

7. Amount of work done:

8. Date of Start

9. Date of Completion
   i) Stipulated date of completion

   ii) Actual date of completion

10. Amount of compensation levied for delayed completion, if any

11. Amount of reduced rate items, if any

12. Performance Report

(1)	Quality of work	Outstanding/Very Good/Good/Poor
(2)	Financial Soundness	Outstanding/Very Good/Good/Poor
(3)	Technical Proficiency	Outstanding/Very Good/Good/Poor
(4)	Resourcefulness	Outstanding/Very Good/Good/Poor
(5)	General behavior	Outstanding/Very Good/Good/Poor

Dated: Executive Engineer or Equivalent

FORM 'D'

DETAILS OF TECHNICAL & ADMINISTRATIVE PERSONNEL TO BE EMPLOYED FOR THE WORK

S.NO.	Design ation	Total number	Number available for this work	Name	Qualifi cation	Professional experience and details of work carried out	How these would be involved in this work	Remarks
1	2	3	4	5	6	7	8	9

Signature of Applicant(s)

FORM "E"

STRUCTURE & ORGANISATION

1. Name of Address of the applicant
2. Telephone No./Fax No.
3. Legal status of the applicant
   (attach copies of original document defining the legal status)
   a) An individual
   b) A proprietary firm
   c) A firm in partnership
   d) A limited company or Corporation
4. Particulars of registration with various Government bodies (attach attested Photocopy)
   Organization/ Place of registration Registration No.

   The applicant should have a solvency of 40% of estimated cost certified by his Bankers. The solvency certificate should not be more than 6 months old.

5. Name and Titles of Directors & Officers with designation to be concerned with this work.
6. Designation of individuals authorized to act for the organization.

7. Was the applicant ever required to suspend construction for a period of more than six months continuously after you commenced the construction? If so, give the name of the project and reasons of suspension of work.

8. Has the applicant or any constituent partner in case of partnership firm, ever abandoned the awarded work before its completion? If so give name of the project and reasons for abandonment.

9. Has the applicant or any constituent partner in case of partnership firm, ever been debarred/ black listed for tendering in any organization at any time? If so, give details.

10. Has the applicant or any constituent partner in case of partnership firm, ever been convicted by a court of law? If so, give details.

11. In which field of Civil Engineering construction the applicant has specialization and interest?

12. Any other information considered necessary but not included above.

Signature of Applicant(s)

HINDUSTAN PREFAB LIMITED
PALAYAM, TRIVANDRUM

Name of Work : Development of Infrastructure Facility at Kadalukani Para – PhaseII , Karette, Thiruvananthapuram

LIST OF PREFERRED BRANDS / MAKES FOR ITEMS

The materials of first/standard quality from the following approved makes or as specified in the particular item of work in the Schedule of Quantity are to be used. In case it is established that the brands specified below are not available in the market, contractor shall submit alternative proposal for the approval of Engineer-in-charge.

Sl.No.	Description	Approved Manufacturer/Brand Name
A&B.	**CIVIL & PLUMBING WORKS**	
1	Primers, paints & distemper	Nerolac, Asian, Berger, Jensons &Nicholson
2	MS Windows	SKS, Raymus, Metal Window Corporation
3	Chequered Tiles	Modern, Nitco, Gem, Eurocon
4	Sanitary Wares	Parryware, Hindware, Neycer, Seabird
5	Bevelled edge mirror	Atul, Jolly, Saint Gobain, Modi
6	CI spun pipes	NECO, Kesoram, Electrosteel
7	G.I.Pipes	Tata, GST, Jindal Hissar
8	G.I.Fittings	Unik, R, KS
9	Brass / CP Brass fittings	Jaquar, Kingston, Gem, Marc. Ess Ess
10	Stainless steel sink	AMC, Orient, Sushag, Neelkanth, Cobra
11	Automatic Flushing Cistern	Utech –m Toshi, Parryware, Hindware, Seabird
12	Plastic W.C.seat cover	Commander, Diplomat, Bestolite
13	C.P.Accessories	Jaquar, Kingston, Gem, Marc, Ess Ess
14	Gunmetal Valves(Full way Check & Globe Valves)	Leader, G.G.Saint,Zoloto,Burn Botteries Jabalpur

15	C.I. Manholes	B.C., R.I.F. Neco, Kazaria
16	Ceramic/ Glazed tiles	Somani, Kazaria, Johnson, NITCO
17	Vitrified Floor Tiles	Somani, Kazaria, Johnson, NITCO,Asian
18	Cement	Ultra-Tech, ACC, Ambuja, Birla, JK, India Cement , Ramco,JSW
19	Mortice Latch	Godrej, Harrison or equivalent
20	White cement	Birla White, J.K. White or equivalent
21	Lime	Satna, Dehradun
22	Putty	Shalimar or equivalent
23	G.I. fittings	'R' Brand, Unik, Zoloto-M.
24	Aluminium Sections (Anodising by approved Anodising Firm)	Hindalco, Jindal, Indian Aluminium Co. Mahavir sections.
25	Water Proofing compound	ROFF, FOSROC, PIDILITE
26	FRP Door Shutters	M/s. Simba FRP(P) Ltd., M/s. Ashoo Model Arts, M/s. Advance FRP, M/s. RAP Fibre Product(P)Ltd. M/s. Fibreways Technology, Rajasree doors
27	Glass Sheets	Modi, Saint Gobain, Atul
28	C. P. waste spreaders urinal Flush pipes	Lotus, Orient, Ess-Ess.
29	UPVC soil waste & Vent. Pipes and fittings	Supreme, Prince, Finolex
30	Acrylic smooth Exterior paint	(Trump) M/s Snowcem India Ltd., Asian, Berger, Nerolac
31	Thermo Mechanically Treated Steel Bars	SAIL, VSP, TISCO,JSW
	ELECTRICAL WORKS	

1	HT Vacuum Circuit Breaker	Megawin/ ABB/ Schnieder
2	HT & LT Cables (XLPE)	Rallison / Gloster / Havells / Finolex / Polycab
3	Relay & Controls	L&T/ Kappa/ Schnieder/ Conzerv/ABB
4	MCCB's & ELM / EFR	Legrand/ L&T/ ABB/ Schnieder
5	Battery Charger	V Guard/ Philips/ Equivalent
6	LT ACBs	Legrand/ L&T/ ABB/ Schnieder
7	Indicating Meters	L & T / MECO / AE / HPL Socomec/Conzerv
8	Energy (KWH) Meters, KW/ KVA Meters/ TOD Meters	L & T / MECO / AE / Conzerv
9	MCB, ELCB, RCCB, RCBO, MCB type Isolator	Legrand / Siemens / ABB/ Indo Asian Gold Plus
10	PVC conduit & accessories	Precision / Konseal / Balco / A1 Plast / Geo
11	Modular type switch / socket / telephone socket / electronic stepped fan regulator / internet jack / TV socket / blanking plate / G.I. or UPVC box,base and cover plate	Legrand / MK / Siemens
12	Wire - FR PVC insulated single core stranded copper / three core flexible cable	Finolex / RR Kabel / V Guard / BCH / Indo asian
13	Paired Telephone cables & RG-6 grade TV cable	Finolex / RR Kabel / V Guard / BCH/ Havells/ Indo asian or equivalent
14	Light fixtures : (Indoor)	Philips/ Bajaj/ Crompton Greaves/ Wipro
15	Electric Ceiling fan	Usha / Bajaj / Orient / Crompton Greaves / Khaithan
16	Wall fan & air circulator	Usha / Bajaj / Khaithan
17	Exhaust fan / fresh air fan / air circulator etc.	Almonard/Bajaj/Crompton Greaves
18	Light fixtures : (outdoor, street & sports)	Philips/Bajaj/Crompton Greaves/Megalux
19	Street light poles	Philips/ Bajaj/ QSP

20	Industrial Plugs/Metal clad Sockets/Metal Enclosures for MCB/MCCB	Legrand / ABB / Siemens/ Indo Asian Gold Plus
21	Ceiling roses, Batten Holder, Angle batten, Pendant Holder	Precision/Ponds/CPL/Anchor/Elleys
22	Distribution boards (DB) - SPN / ETPN / VTPN/ MCCB DB's	Legrand / Siemens / ABB/ Indo Asian Gold Plus
23	FN / SFU / SDF / MDF / Isolator / Changeover / HRC	L & T / Legrand / Siemens / ABB
24	Weather proof boxes / SMC Sheets pole mounted boxes, Cable junction boxes etc.	Syntex / Hensel/ Equivalent
25	Capacitors / Capacitor bank panels	L&T / ABB / Conzerve / equivalent

NOTE:

1. The Contractor shall supply ISI marked material as per the makes or brands indicated above. In case the firm is not manufacturing ISI marked material for any of the brands, first quality material shall be accepted. The samples including make and brand of the material shall in either case have to be got approved from the Engineer in Charge

2. The contractor shall provide the materials as per the make or brand indicated above. When two or more alternatives/ Brands have been mentioned, the Brand to be finally used shall be as decided by the Engineer-in-Charge.

3. Material where no make/brand has been mentioned, ISI marked samples shall be submitted by the Contractor for approval of Engineer in Charge. For those class of materials, where no firm exists with ISI approval, sample of first quality material of the firm shall be submitted for the approval of the Engineer in Charge.

4. Any variation from the above mentioned makes/brands will require specific approval of the Engineer in Charge.

5. It will be contractor's responsibility to ensure the quality of products listed in approved list of brands. Contractor will have to replace the defective and substandard materials at his own cost.

HINDUSTAN PREFAB LIMITED

PALAYAM, TRIVANDRUM

NAME OF WORK : DEVELOPMENT OF INFRASTRUCTURE FACILITY AT KADALUKANI PARA - PHASE II KARETTE ,THIRUVANANTHAPURAM

ABSTRACT

Sl. No	DESCRIPTION	AMOUNT
A	CIVIL WORKS	12166190.46
B	LANDSCAPE WORK	765150.00
C	ELECTRICAL WORK	2279097.65
D	SUB TOTAL (A+B+C+D)	15210438.12
E	ADD : CGST on Construction Services @ 6% on "D"	912626.29
F	ADD : SGST on Construction Services @ 6% on "D"	912626.29
G	SUB TOTAL = (D+ E+F)	17035691.00

HINDUSTAN PREFAB LIMITED

Palayam, Trivandrum

NAME OF WORK:- DEVELOPMENT OF INFRASTRUCTURE FACILITY AT KADALUKANI PARA - PHASE II KARETTE ,THIRUVANANTHAPURAM

DSR Year : 2016, Cost index applied for this estimate is 37.93%

DETAILED ESTIMATE

SL NO	DSR No.	DESCRIPTION	Unit	Qty	Rate	Amount
A		**CIVIL WORKS**				
1	2.1	Earth work in suface excavation not exceeding 30 cm in depth, but exceeding 1.5 m in width as well as 10 sqm on plan including getting out and disposal of excavated earth, lead up to 50 m and lift up to 1.5 m, as directed by Engineer-in-charge.				
a	2.1.1	All kinds of soil	Sqm	1891.89	53.00	100270.17
2	2.6	Earth work in excavation by mechanical means (Hydraulic excavator)/manual means over areas (exceeding 30 cm in depth, 1.5 m in width as well as 10 sqm on plan) including disposal of excavated earth, lead up to 50 m and lift up to 1.5 m, disposed earth to be levelled and neatly dressed.				
a	2.6.1	All kinds of soil	Cum	656.38	125.95	82671.06
3	2.7	Earth work in excavation by mechanical means (Hydraulic excavator)/ manual means over areas (exceeding 30 cm in depth, 1.5 m in width as well as 10 sqm on plan) including disposal of excavated earth, lead up to 50 m and lift up to 1.5 m, disposed earth to be levelled and neatly dressed.				
a	2.7.1	Ordinary rock	Cum	10.50	221.05	2321.03
b	2.7.2	Hard rock (requiring blasting)	Cum	10.50	393.30	4129.65
4	2.25	Filling available excavated earth (excluding rock) in trenches, plinth, sides of foundations etc. in layers not exceeding 20 cm in depth, consolidating each deposited layer by ramming and watering, lead up to 50 m and lift up to 1.5 m.	Cum	578.52	125.75	72748.89
5	2.27	Supplying and filling in plinth with Jamuna sand under floors, including watering, ramming consolidating and dressing complete.	Cum	128.84	917.75	118242.91
6	2.32	Clearing grass and removal of the rubbish up to a distance of 50 m outside the periphery of the area cleared.	Sqm	1893.01	3.65	6909.49
7	4.1	Providing and laying in position cement concrete of specified grade excluding the cost of centering and shuttering - All work up to plinth level:				
a	4.1.3	1:2:4 (cement : 2 coarse sand : 4 graded stone aggregate 20 mm nominal size)	Cum	90.01	5481.95	493430.32
b	4.1.8	1:4:8 (1 cement : 4 coarse sand : 8 graded stone aggregate 40 nominal size)	Cum	96.06	4478.15	430171.09
8	5.1	Providing and laying in position specified grade of reinforced cement concrete, excluding the cost of centering, shuttering, finishing and reinforcement - All work up to plinth level:				
a	5.1.2	1:1:5:3 (1 cement 1.5 coarse sand :3 graded stone aggregate 20 mm nominal size	Cum	35.44	6215.35	220272.00
9	5.9	Centering and shuttering including strutting, propping etc. and removal of form for all heights :				

SL NO	DSR No.	DESCRIPTION	Unit	Qty	Rate	Amount
a	5.9.5	Lintels, beams, plinth beams, girders bressumers and cantilevers	Sqm	193.33	342.90	66292.86
10	5.22	Steel reinforcement for R.C.C work including straightening, cutting, bending, placing in position and binding all complete upto plinth level				
a	5.22.6	Thermo - Mechanically Treated bars of grade Fe-500D or more	Kg	13106.60	56.60	741833.56
11	7.1	Random rubble masonry with hard stone in foundation and plinth including levelling up with cement concrete 1:6:12 (1 cement : 6 coarse sand : 12 graded stone aggregate 20 mm nominal size) upto plinth level with :				
a	7.1.1	Cement mortar 1:6 (1 cement : 6 coarse sand)	Cum	4.65	3965.85	18441.20
12	10.2	Structural steel work riveted, bolted or welded in built up sections, trusses and framed work, including cutting, hoisting, fixing in position and applying a priming coat of approved steel primer all complete.	Kg	36763.49	67.60	2485211.92
13	12.48	Providing & fixing on roof pressed clay tile (Mangalore tile) of 20 mm nominal thickness and of approved size and as per approved pattern on steel frame work complete (steel frame work to be paid separately	Sqm	113.72	238.00	27065.36
14	12.49	Providing & laying on roof pressed clay tile ridge (Mangalore tile) of 20 mm thickness and of approved pattern on steel frame work complete (steel frame work to be paid separately).	RM	52.92	52.45	2775.65
15	13.1	12 mm cement plaster of mix:				
a	13.1.1	1:4 (1 cement : 4 fine sand)	Sqm	404.21	172.95	69908.12
16	13.46	Finishing walls with Acrylic Smooth exterior paint of required shade :				
a	13.46.1	New work (Two or more coat applied @ 1.67 ltr/10 sqm over and including priming coat of exterior primer applied @ 2.20 kg/10 sqm)	Sqm	424.42	96.05	40765.54
17	13.52	Finishing with Epoxy paint (two or more coats) at all locations prepared and applied as per manufacturer's specifications including appropriate priming coat, preparation of surface, etc. complete.				
a	13.52.1	On steel work	Sqm	12809.26	122.50	1569134.35
18	16.90	Providing and laying tactile tile (for vision impaired persons as per standards) of size 300x300x9.8mm having with water absorbtion less than 0.5% and conforming to IS : 15622 of approved make in all columns and shades in for outdoor floors such as foot path, court yard, multi modals location etc, laid on 20mm thick base of cement mortar 1:4 (1 cement : 4 course sand) in all shapes and patterns including grouting the joints with white cement mixed with matching pigments etc. complete as per direction of engineer-in-charge.	Sqm	315.21	1450.45	457196.34

SL NO	DSR No.	DESCRIPTION	Unit	Qty	Rate	Amount
19	16.91	Providing and laying factory made chamfered edge Cement Concrete paver blocksin footpath, parks, lawns, drive ways or light traffic parking etc, of required strength,thickness & size/ shape, made by table vibratory method using PU mould, laid inrequired colour & pattern over 50mm thick compacted bed of sand, compacting andproper embedding/laying of inter locking paver blocks into the sand bedding layerthrough vibratory compaction by using plate vibrator, filling the joints with sand andcutting of paver blocks as per required size and pattern, finishing and sweepingextra sand. complete all as per direction of Engineer-in-Charge.				
a	16.91.2	80 mm thick C.C. paver block of M-30 grade with approved color design and pattern.	Sqm	945.00	638.95	603807.75
		WATERSUPPLY AND SANITATION				
20	17.7	Providing and fixing wash basin with C.I. brackets, 15 mm C.P. brass pillar taps, 32 mm C.P. brass waste of standard pattern, including painting of fittings and brackets, cutting and making good the walls wherever require:				
a	17.7.3	White Vitreous China Wash basin size 550x400 mm with a pair of 15 mm C.P. brass pillar taps	Each	4	2095.30	8381.20
21	17.28	Providing and fixing P.V.C. waste pipe for sink or wash basin including P.V.C. waste fittings complete.				
a	17.28.1	Semi rigid pipe				
i	17.28.1.2	40 mm dia	Each	5	81.40	407.00
22	17.29	Providing and fixing 100 mm sand cast Iron grating for gully trap	Each	4	29.25	117.00
23	17.30	Providing and fixing in position 25 mm diameter mosquito proof coupling of approved municipal design.	Each	2	38.50	77.00
24	18.7	Providing and fixing Chlorinated Polyvinyl Chloride (CPVC) pipes, having thermal stability for hot & cold water supply, including all CPVC plain & brass threaded fittings, including fixing the pipe with clamps at 1.00 m spacing. This includes jointing of pipes & fittings with one step CPVC solvent cement and testing of joints complete as per direction of Engineer in Charge				
a	18.7.1	15 mm nominal outer dia Pipes	Metre	20	142.95	2859.00
25	18.9	Providing and fixing Chlorinated Polyvinyl Chloride (CPVC) pipes, having thermal stability for hot & cold water supply including all CPVC plain & brass threaded fittings This includes jointing of pipes & fittings with one step CPVC solvent cement, trenching, refilling & testing of joints complete as per direction of Engineer in Charge.				
a	18.9.2	20mm dia	Metre	40	149.30	5972.00
b	18.9.3	25mm dia	Metre	50	191.65	9582.50
c	18.9.4	32mm dia	Metre	20	250.55	5011.00
d	18.9.5	40mm dia	Metre	30	321.15	9634.50
26	18.17	Providing and fixing gun metal gate valve with C.I. wheel of approved quality (screwed end) :				
a	18.17.1A	20 mm dia	Each	2	396.55	793.10
b	18.17.2	32mm dia	Each	2	500.75	1001.50

SL NO	DSR No.	DESCRIPTION	Unit	Qty	Rate	Amount
c	18.17.3	40mm dia	Each	2	584.70	1169.40
27	18.51	Providing and fixing C.P. brass long body bib cock of approved quality conforming to IS standards and weighing not less than 690 gms.				
a	18.51.1	15 mm nominal bore	Each	4	492.55	1970.20
28	18.53	Providing and fixing C.P. brass angle valve for basin mixer and geyser points of approved quality conforming to IS:8931				
a	18.53.1	15mm nominal bore	Each	4	475.70	1902.80
29	18.58	Providing and fixing PTMT grating of approved quality and colour.				
a	18.58.2	Rectangular type with openable circular lid				
i	18.58.2.1	150 mm nominal size square 100 mm diameter of the inner hinged round grating	Each	4	150.05	600.20
30	23.1	Boring/drilling bore well of required dia for casing/ strainer pipe, by suitable method prescribed in IS: 2800 (part I), including collecting samples from different strata, preparing and submitting strata chart/ bore log, including hire & running charges of all equipments, tools, plants & machineries required for the job, all complete as per direction of Engineer-in-charge, upto 90 metre depth below ground level.				
a	23.1.1	All types of soil				
i	23.1.1.1	300 mm dia	Metre	20	370.70	7414.00
b	23.1.2	Rocky strata including Boulders				
i	23.1.2.1	300 mm dia	Metre	5	855.10	4275.50
31	23.2	Boring/drilling bore well of required dia for casing/ strainer pipe, by suitable method prescribed in IS: 2800 (part I), including collecting samples from different strata, preparing and submitting strata chart/ bore log, including hire & running charges of all equipments, tools, plants & machineries required for the job, all complete as per direction of Engineer -in-charge, beyond 90 metre & upto 150 metre depth below ground level.				
a	23.2.1	All types of soil				
i	23.2.1.1	300 mm dia	Metre	20	432.45	8649.00
b	23.2.2	Rocky strata including Boulders				
i	23.2.2.1	300 mm dia	Metre	5	927.10	4635.50
		Sub Total for Schedule Items (Civil)				**7688051.67**
		Add: Cost Index@37.93%				**2916078.00**
		Total for Schedule Items (Civil)				**10604129.66**
		Non scheduled Item				
		CHILDRENS PLAYING EQUIPMENTS				
32	NS1	Providing and fixing Garden Bench with cast iron legs fitted with 3”X 1’’ 16 BSWG GI strips 5feet long primed and painted in black colour for legs and red/green srips . Cost includes fixing costs , materials, labour etc complete (Rate shall be inclusive of fixing the bench to rock also)	Nos	10	39486.18	394861.80
33	NS2	Supplying and fixing Children's play equipments to rock including foundation etc.complete				

SL NO	DSR No.	DESCRIPTION	Unit	Qty	Rate	Amount
a		DOUBLE ARC SWING Product Zone: 3.2m X 1.5m(10.5ft X 5ft) Ideal For: 4-14 Years.	Nos	1	78000.00	78000.00
b		Product Zone: 6.5m X 1.5m(21.3ft X 5ft)	Nos	1	128000.00	128000.00
c		Product Zone: 5.5m X 2.5m(18ft X 8.2ft)	Nos	1	249000.00	249000.00
d		Product Zone: 4.7m X 1.0m(15.4ft X 3.3ft)	Nos	1	160000.00	160000.00
e		Product Zone: 1m X 0.5m(3.3ft X 1.6ft)	Nos	1	44100.00	44100.00
f		Product Zone: 35 X 0.7 X 2.4	Nos	1	49500.00	49500.00
g		Product Zone: 4 X 2	Nos	1	63500.00	63500.00
h		Product Zone: 5.0m X 2.2m(16.4ft X 7.2ft)	Nos	1	263000.00	263000.00
34	NS3	SOIL, WASTE, VENT AND RAIN WATER PIPES INTERNAL DRAINAGE (CONCEALED IN WALL) Providing and fixing Polyvinyl Chloride (6 kg/cm2, IS:4985) pipes, for drainage from fixtures to floor trap, flush valve to EWC and vent / anti siphonage pipes up to 63mm dia, including all fittings. This includes jointing of pipes & fittings with one step PVC solvent cement, .i/c fixing the pipe with clamps at 1.00 m spacing. This includes the cost of cutting chases and making good the same including testing of joints complete as per direction of Engineer-in-Charge. Concealed work, including cutting chases and making good the wall etc. - internal 40mm dia	Metre	60	200.00	12000.00
		Total for Non Schedule Items (Civil)				**1,441,961.80**
		PWD OBSERVED DATA ITEM - CIVIL				
35	50.6.3.1	Solid block masonry using pre cast solid blocks (Factory made) of size 40x20x10cm or nearest available size confirming to IS 2185 part I of 1979 for foundation and plinth for 10 cm thick wall in CM 1:6 (1 cement : 6 coarse sand) including cost of scaffolding etc complete.	Cum	20.00	6004.95	120099.00
		Total				**120,099.00**
		Total for Civil Works				**12,166,190.46**
B		**LANDSCAPING WORKS**				
		Horticulture and Landscaping`				
36	2.33	Providing and fixing Neelgiri/Mexican grass turf with earth 50mm to 60mm thickness of existing ground prepared with proper level and ramming with required tools wooden (Dhurmos) and than rolling the surface with light roller make the surface smoothen and even, watering with sprinkler.	Sqm	160.00	203.90	32624.00
37	2.50	Providing & fixing of White River (Stone) Pables size of 2" to 2.50" dia in natural colour at site of work including loading, unloading, carriage and all taxes paid etc.and as per direction of officer in charge.	Per Qtl.	50.00	550.10	27505.00
38	3.13	Providing and displaying of Araucaria cookie plant, having ht. 1.80 m to 1.95 m, straight, well developed, fresh and healthy with lush green leaves from bottom to top in 30 cm size of Earthen pot / Plastic pot & as per direction of the officer-in-charge.	Each	30.00	512.50	15375.00

SL NO	DSR No.	DESCRIPTION	Unit	Qty	Rate	Amount
39	3.16	Providing and displaying of Areca palm plant, having ht. 1.50 m to 1.80 m with 6 to 8 suckers, well developed, fresh and healthy with lush green foliage in 25 cm size of Earthen pot / Plastic pot & as per direction of the officer-in-charge.	Each	30.00	184.50	5535.00
40	3.26	Providing and displaying of Croton Baby Golden plant (three in one), having ht. 30cm, multi branches, well developed with fresh and healthy foliage in 25 cm size of Earthen pot / Plastic pot. as per direction of the officer-incharge.	Each	30.00	76.90	2307.00
41	3.54	Providing and displaying of Money Plant Golden leaves mounted on moss stick 90cm ht., having 3 plants at equal distance, well developed with full of fresh, shinning and healthy leaves from bottom to top in 25 cm size of Earthen pot / Plastic pot & as per direction of the officer-in-charge.	Each	20.00	153.75	3075.00
42	5.9	Providing and Displaying Bamboo Buddha Valley with fresh & healthy 5 to 6 suckers 1.80 m to 2.10m ht umbrella type plant well developed in 50 cm Cement Pot as per direction of the officer-in-charge.	Each	60.00	1435.00	86100.00
43	5.10	Providing and Displaying Bird of paradise well developed with fresh & healthy 90 to 120 cm ht in 30 cm Earthen Pot/ Plastic Pot as per direction of the officer-in-charge.	Each	70.00	389.50	27265.00
44	5.12	Providing and Displaying Bougainvillea named variety, Sobhra, Thima, Marry palmar, Cherry Blossom etc. well developed with fresh & healthy bushy plant in full bloom 75 to 90 cm ht. in 40 cm Cement Pot as per direction of the officer-in-charge.	Each	50.00	307.50	15375.00
45	5.30	Providing and Displaying Foxtail palm plant well developed with fresh & healthy foliage of ht. 210 to 240 cm in big 40 cm Cement Pot as per direction of the officer-in-charge	Each	60.00	1127.50	67650.00
46	5.35	Providing and Displaying Latania Rubra Palm well developed with fresh & healthy foliage 150 to 180 cm ht. with 6 to 7 leaves in big 35 cm Cement Pot as per direction of the officer-incharge.	Each	60.00	1025.00	61500.00
47	7.31	Supply and stacking of Ficus elastica Decora (Rubber plant) plant of height 45-60 cm. in earthen pots of size 25 cm as per direction of the officer-in-charge.	Each	50.00	60.00	3000.00
48	7.72	Supply and stacking of Plumeria rubra plant of height 120-150 cm. with 3-4 branches and thick stem in big size HDPE bags as per direction of the officer-in-charge.	Each	50.00	400.00	20000.00
49	9.7	Supply and stacking of Ipomea purpurea (Morning glory) plant of height30 cm to 45 cm. in 20 cm size of Earthen pots / Plastic pots & as per direction of the officer-in-charge.	Each	60.00	35.00	2100.00
		Sub Total for Schedule Items				**369411.00**
		Add: Cost Index@37.93%				**140117.59**
		Total for Schedule Items				**509528.59**
		PWD OBSERVED DATA				

SL NO	DSR No.	DESCRIPTION	Unit	Qty	Rate	Amount
50	30.2.56	Anti termite treatment of lawn area through premise 30.50% I P. one liter premise diluted in 499 liters water and applying solution @ 1.00 litre solution per sqm lawn or bed area.(two application) i/c cost of chemical)and as per direction of officer-in-charge.	Sqm	360.00	9.72	3499.20
		Sub Total for Observed data				**3499.20**
		NON SCHEDULE ITEMS				
51	NS4	Filling mixture of earth and sludge or manure in the desired proportion in trenches, flooding with water and leveling including cost of supplying earth and sludge or manure and mixing.	Cum	396.00	412.69	163426.86
52	NS5	Supplying, planting and maintaining the following plants, after preparing the surface and watering as required until the plants properly takes roots. (Maintaining upto 3 months) as per direction.				
a		Alamanda - 1.5ft	Each	60.00	238.11	14286.45
b		Hydrangea - 2ft	Each	70.00	178.58	12500.64
c		Lantana 1 -1.25 ft	Each	60.00	238.11	14286.45
d		Dalmatian bellflower - 9 inches	Each	60.00	238.11	14286.45
e		Yellow Bamboo - 3ft	Each	80.00	416.69	33335.05
		Total for Non Schedule Items				**252121.91**
		Total for Landscaping works				**765,150.00**
C		**ELECTRICAL WORKS**				
		Scheduled Items				
		Wiring				
53	1.10	**Point wiring in P.V.C conduit, with modular type switch:** Wiring for light point/ fan point/ exhaust fan point with 1.5 sq.mm FRLS PVC insulated copper conductor single core cable in surface / recessed medium class PVC conduit, with modular switch, modular plate, suitable GI box and earthing the point with 1.5 sq.mm FRLS PVC insulated copper conductor single core cable etc. as required.				
a)	1.10.3	Group C	Point	30.00	757.00	22710.00
54	1.11	**Twin control light point in P.V.C conduit, with modular type switch:** Wiring for twin control light point with 1.5 sq.mm FRLS PVC insulated copper conductor single core cable in surface / recessed medium class PVC conduit, 2 way modular switch, modular plate, suitable GI box and earthing the point with 1.5 sq.mm FRLS PVC insulated copper conductor single core cable etc. as required.	Point	6.00	809.00	4854.00
55	1.17	**Wiring in existing PVC conduit:** Supplying and drawing following sizes of FRLS PVC insulated copper conductor, single core cable in the existing surface/ recessed steel/ PVC conduit as required.				
a)	1.17.3	2 x 1.5 sq mm + 1 x 1.5 sq mm earth wire	Metre	175.00	50.00	8750.00
b)	1.17.12	2 x 2.5 sq mm + 1 x 2.5 sq mm earth wire	Metre	50.00	75.00	3750.00
c)	1.17.21	2 x 4 sq mm + 1 x 4 sq mm earth wire	Metre	50.00	111.00	5550.00
56	1.21	**S/F PVC Conduit:** Supplying and fixing of following sizes of medium class PVC conduit along with accessories in surface/recess including cutting the wall and making good the same in case of recessed conduit as required.				

SL NO	DSR No.	DESCRIPTION	Unit	Qty	Rate	Amount
a)	1.21.1	20 mm	Metre	200.00	57.00	11400.00
b)	1.21.2	25mm	Metre	50.00	69.00	3450.00
		Switches & accessories				
57	1.24	**S/F modular type switch/ socket :** Supplying and fixing following modular switch/ socket on the existing modular plate & switch box including connections but excluding modular plate etc. as required.				
a)	1.24.1	5/6 A switch	Each	5.00	84.00	420.00
b)	1.24.3	15/16 A switch	Each	2.00	114.00	228.00
c)	1.24.4	5/6 A 3 pin socket outlet	Each	5.00	81.00	405.00
d)	1.24.5	15/16 A 6 pin socket outlet	Each	2.00	153.00	306.00
58	1.25	**S/F 2 module type electronic fan regulator :** Supplying and fixing two module stepped type electronic fan regulator on the existing modular plate switch box including connections but excluding modular plate etc. as required.	Each	4.00	288.00	1152.00
59	1.26	**S/F modular type blanking plates :** Supplying and fixing modular blanking plate on the existing modular plate & switch box excluding modular plate as required.	Each	5.00	24.00	120.00
60	1.27	**S/F modular boxes, base & cover plate :** Supplying and fixing following size/ modules, GI box alongwith modular base & cover plate for modular switches in recess etc. as required.				
a)	1.27.2	3 Module (100 mmx75 mm)	Each	5.00	185.00	925.00
b)	1.27.3	4 Module (125 mm x75 mm)	Each	2.00	205.00	410.00
61	1.31	**S/F light plug point with modular type accessories:** Supplying and fixing suitable size GI box with modular plate and cover in front on surface or in recess, including providing and fixing 3 pin 5/6 A modular socket outlet and 5/6 A modular switch, connections etc. as required.	Each	5.00	313.00	1565.00
62	1.32	**S/F Power plug point with modular type accessories:** Supplying and fixing suitable size GI box with modular plate and cover in front on surface or in recess, including providing and fixing 6 pin 5/6 A & 15/16 A modular socket outlet and 15/16 A modular switch, connections etc. as required.	Each	2.00	406.00	812.00
		Fittings				
63	1.35	**S/F LED light fittings directly on ceiling/wall :** Installation, testing and commissioning of wall bracket /ceiling fittings of all sizes and shapes containing upto two GLS/CFL/ LED lamps per fitting, complete with all accessories including connections etc. as required.	Each	25.00	58.00	1450.00
64	1.40	**S/F flexible 0.50 Sq.mm 2 core cable:** Supply and fixing plain 16/0.20 mm (0.50 sq.mm) twin circular flexible FRLS PVC insulated, PVC sheathed copper conductorcable direct on the wall with PVC clips etc. as required.	Metre	35.00	19.00	665.00
65	1.44	**ITC ceiling fan :** Installation, testing and commissioning of ceiling fan, including wiring the down rods of standard length (upto 30 cm) with 1.5 sq. mm FRLS PVC insulated, copper conductor, single core cable etc. as required.	Each	4.00	105.00	420.00

SL NO	DSR No.	DESCRIPTION	Unit	Qty	Rate	Amount
66	1.50	**ITC Exhaust fan :** Installation of exhaust fan in the existing opening, including making good the damage, connection, testing, commissioning etc. as required.				
a)	1.50.1	Upto 450 mm sweep	Each	4.00	224.00	896.00
		MCB Distribution Board				
67	2.3	**S/F Horizontal SPN MCB DB :** Supplying and fixing following way, single pole and neutral, sheet steel, MCB distribution board, 240 V, on surface/ recess,complete with tinned copper bus bar, neutral bus bar, earth bar,din bar, interconnections, powder painted including earthing etc. as required. (But without MCB/RCCB/Isolator)				
a)	2.3.2	8 way, Double door	Each	4.00	1061.00	4244.00
b)	2.3.3	12 way, Double door	Each	1.00	1151.00	1151.00
68	2.10	**S/F 'C' Series MCB :** Supplying and fixing 5 A to 32 A rating, 240/415 V, 10 kA, “C” curve, miniature circuit breaker suitable for inductive load of following poles in the existing MCB DB complete with connections, testing and commissioning etc. as required.				
a)	2.10.1	Single pole	Each	90.00	173.00	15570.00
b)	2.10.2	Single pole and neutral	Each	5.00	445.00	2225.00
69	2.13	**S/F 4P MCB Isolator:** Supplying and fixing following rating, four pole, 415 V, isolator in the existing MCB DB complete with onnections, testing and commissioning etc. as required				
a)	2.13.1	40 amps	Each	3.00	667.00	2001.00
70	2.14	**S/F SPN RCCB :** Supplying and fixing following rating, double pole, (single phase and neutral), 240 V, residual current circuit breaker (RCCB),having a sensitivity current 30 mA in the existing MCB DB complete with connections, testing and commissioning etc. as required.				
a)	2.14.1	25 amps	Each	5.00	1650.00	8250.00
71	2.15	**S/F TPN RCCB :** Supplying and fixing following rating, four pole, (three phase and neutral), 415 V, residual current circuit breaker (RCCB), having a sensitivity current 30 mA in the existing MCB DB complete with connections, testing and commissioning etc. as required.				
a)	2.15.2	40 amps	Each	3.00	2131.00	6393.00
72	2.16	**S/F of DP enclosure with MCB:** Supplying and fixing DP sheet steel enclosure on surface/recess along with 25/32 A, 240 V “C” curve DP MCB complete with connections, testing and commissioning etc. as required.	Each	1.00	627.00	627.00
73	2.18	**S/F of SPN Industrial socket outlet:** Supplying and fixing 20 A, 240 V, SPN Industrial type socket outlet, with 2 pole and earth, metal enclosed plug top alongwith 20 A, “C” curve, SP, MCB, in sheet steel enclosure, on surface or in recess, with chained metal cover for the socket out let and complete with connections, testing and commissioning etc. as required.	Each	1.00	980.00	980.00
		Earthing				

SL NO	DSR No.	DESCRIPTION	Unit	Qty	Rate	Amount
74	5.2	**GI Pipe Earthing :** Earthing with G.I. earth pipe 4.5 meter long, 40 mm dia including accessories, and providing masonry enclosure with cover plate having locking arrangement and watering pipe etc. with charcoal/coke and salt as required.	Set	5.00	3672.00	18360.00
75	5.4	**GI Plate Earthing :** Earthing with G.I. earth plate 600 mm X 600 mm X 6 mm thick including accessories, and providing masonry enclosure with cover plate having locking arrangement and watering pipe of 2.7 meter long etc. with charcoal/ coke and salt as required.	Set	2.00	4327.00	8654.00
76	5.8	**S/L 25mm X 5mm Copper strip on ground :** Supplying and laying 25 mm X 5 mm Copper strip, as earth conductor, 0.5 mtr below the ground level, including soldering, jointing surface must be lead plated and using brass nut & bolts, etc. as required.	Metre	40.00	595.00	23800.00
77	5.19	**S/L 4 mm dia Copper wire on ground :** Providing and fixing 4.00 mm dia (8 SWG) copper wire on surface or in recess for loop earthing along with existing surface/ recessed conduit/ submain wiring/ cable as required.	Metre	1000.00	73.00	73000.00
		Lightning Conductor				
78	6.2	**S/F of lightning conductor:** Providing and fixing of lightning conductor finial, made of 25 mm dia 300 mm long, G.I. tube, having single prong at top, with 85 mm dia 6 mm thick G.I. base plate including holes etc. complete as required.	Each	2.00	304.00	608.00
79	6.7	**S/F of GI tape(For horizontal run):** Providing and fixing G.I. tape 20 mm X 3 mm thick on parapet or on surface of wall for lightning conductor complete as required.(For horizontal run)	Metre	20.00	66.00	1320.00
80	6.8	**S/F of GI tape(For vertical run):** Providing and fixing G.I. tape 20 mm X 3 mm thick on parapet or on surface of wall for lightning conductor complete as required. (For vertical run)	Metre	15.00	100.00	1500.00
		MV Cable				
81	7.1	**Laying of PVC insulated and PVC sheathed / XLPE power cable:** Laying of one number PVC insulated and PVC sheathed / XLPE power cable of 1.1 kV grade of following size direct in ground including excavation, sand cushioning, protective covering and refilling the trench etc. as required.				
a)	7.1.1	Upto 35 sq. mm	Metre	925.00	206.00	190550.00
b)	7.1.2	Above 35 sq. mm and upto 95 sq. mm	Metre	250.00	214.00	53500.00
82	7.9	**S/F of cable route marker :** Supplying and making cable route marker with cement concrete 1:2:4 (1 cement : 2 coarse sand : 4 graded stone aggregate 20 mm nominal size) of size 60 cm X 60 cm at the bottom and 50 cm X 50 cm at the top with a thickness of 10cm including inscription duly engraved as required.	Each	50.00	333.00	16650.00

SL NO	DSR No.	DESCRIPTION	Unit	Qty	Rate	Amount
83	9.1	**S/F of cable end termination :** Supplying and making end termination with brass compression gland and aluminium lugs for following size of PVC insulated and PVC sheathed / XLPE aluminium conductor cable of 1.1 kV grade as required.				
a)	9.1.1	2 x 6 sq. mm (19mm)	Each	34.00	157.00	5338.00
b)	9.1.2	2 x 10 sq. mm (19mm)	Each	30.00	158.00	4740.00
c)	9.1.3	2 x 16 sq. mm (22mm)	Each	30.00	170.00	5100.00
d)	9.1.20	3½ x 25 sq. mm (28mm)	Each	4.00	257.00	1028.00
e)	9.1.21	3½ x 35 sq. mm (32mm)	Each	2.00	282.00	564.00
f)	9.1.22	3½ x 50 sq. mm (35mm)	Each	2.00	354.00	708.00
		Sub Total for Schedule Items (Electrical)				**517099.00**
		Add: Cost Index @ 37.93%				**196135.65**
		Total for Schedule Items (Electrical)				**713234.65**
		NON SCHEDULE ITEMS - ELECTRICAL				
84	ENS 1	**Supply of 20W LED batten/ tube light fittings :** Supply and providing 20W Surface mounting type LED lenier batten/ tube light fittings with output of 2000 lumen, made out of CRCA body with white acrylic cover etc. as required.	Each	6.00	575.00	3450.00
85	ENS 2	**Supply of 15/18 W square type surface/recess LED down lighter :** Supply and providing square type 15/18 W low glare, surface/recess mounting type, integral LED down light fittings with white powder coated Die cast aluminium body with anodised aluminium reflector etc.as required.	Each	19.00	3485.00	66215.00
86	ENS 3	**SITC of 45/50 W LED outdoor fittings :** Supply, installation, testing and commissioning of 45 / 50 watts, LED street light fittings made up of epoxy powder coated pressure die cast housing with prismatic polycarbonate diffuser and individual CREE LED / Equivalent make LEDs with secondary optics and IP65 protection with complete accessories etc, including giving connections using required length of 1.5 sq.mm PVC insulated and sheathed 3 core round flexible copper wire, etc. as per the direction of engineer in charge as required.	Each	41.00	4225.00	173225.00
87	ENS 4	**S/F 12 mm steel 'S' type fan hook :** Supply and providing 12 mm dia steel 'S' type fan hooks, on the RCC roof, making good the damages of roof etc. as required	Each	4.00	121.00	484.00
88	ENS 5	**Supply of 1200mm Ceiling Fan :** Supply of 1200 mm sweep 5 star rated Electric Ceiling Fan, White Colour, capacitor type with double ball bearing, shackles, 300 mm down rod, canopies, blades and resistance type regulator etc. suitable for operation on 220/ 240V, 50 Hz, single phase AC supply etc. as required.	Each	4.00	1975.00	7900.00

SL NO	DSR No.	DESCRIPTION	Unit	Qty	Rate	Amount
89	ENS 6	**Supply of 305mm Exhaust Fan :** Supply of 300/305 mm sweep light duty exhaust fan in metal frame suitable for operation on 220/ 240V, 50 Hz, single phase AC supply etc. as required.	Each	4.00	1736.00	6944.00
90	ENS 7	**S/F Vertical TPN MCB DB :** Supplying and fixing of following ways surface/ recess mounting, vertical type, 415 V, TPN MCB distribution board of sheet steel, dust protected, duly powder painted, inclusive of 200 A, tinned copper bus bar, common neutral link, earth bar, din bar for mounting MCBs (but without MCBs and incomer) as required. (Note : Vertical type MCB TPDB is normally used where 3 phase outlets are required.)				
a)		8 way (4+24), Double door	Each	1.00	7812.00	7812.00
91	ENS 8	**S/F Horizontal TPN MCB DB :** Supplying and fixing following way, horizontal type three pole and neutral, sheet steel, MCB distribution board, 415 V, on surface/ recess, complete with tinned copper bus bar, neutral bus bar, earth bar, din bar, interconnections, powder painted including earthing etc. as required. (But without MCB/RCCB/ Isolator)				
		6 way (4+18), Double door	Each	2.00	3668.00	7336.00
92	ENS 9	**S/F Vertical TPN MCCB DB :** Supplying and fixing following way, vertical type three pole and neutral, sheet steel, MCB distribution board, with provision for fixing MCCB as incomer, 415 V, on surface/ recess, complete with tinned copper bus bar, neutral bus bar, earth bar, din bar, interconnections, powder painted including earthing etc. as required. (But without MCB/MCCB/ Isolator)				
		8 way (4 + 24), Double door	Each	1.00	10756.00	10756.00
93	ENS 10	**S/F 'C' Series MCB :** Supplying and fixing 40A rating Triple pole , 415 V, 10 kA, "C" curve, miniature circuit breaker suitable for inductive load of following poles in the existing MCB DB complete with connections, testing and commissioning etc. as required..	Each	6.00	1837.00	11022.00
94	ENS 11	**S/F 100 A 16 kA 4 P MCCB :** Supplying and fixing of one number 100A , 16 kA , 4 pole (three phase and neutral) 415 volts, moulded case circuit breaker (MCCB) having thermal release adjustable settings of 0.7 to 1 ln, in the existing MCCB DB etc. as required.	Each	1.00	5375.00	5375.00
95	ENS 12	**Supply of XLPE cable :** Supply of 1.1 KV grade Aluminium conductor XLPE insulated PVC sheathed armoured power cable of the following size etc. as required.				
a)		2C x 6 sq. mm	Metre	150.00	93.00	13950.00
b)		2C x 10 sq. mm	Metre	300.00	114.00	34200.00
c)		2C x 16 sq. mm	Metre	200.00	134.00	26800.00
d)		3½C x 25 sq. mm	Metre	200.00	221.00	44200.00
e)		3½C x 35 sq. mm	Metre	75.00	267.00	20025.00
f)		3½ Cx 50 sq. mm	Metre	250.00	348.00	87000.00

SL NO	DSR No.	DESCRIPTION	Unit	Qty	Rate	Amount
96	ENS 13	**S/L of 12 SWG bare copper:** Supply and laying one number of the 12 SWG good quality bare copper wire for loop earthing along with existing XLPE insulated aluminium cable as required.	Metre	600.00	50.00	30000.00
97	ENS 14	**S/L of 3 core 4 sq.mm flat Submersible cable:** Supplying and laying PVC Insulated and sheathed 3 core 4 sq.mm flat submersible cable with annealed plain electrolytic copper conductor as per IS 8130/1934 insulated and sheathed with electrical grade PVC compound as per IS 5831/1984 generally conforming to IS 694/1990, including all minor civil works such as chipping of floor / chasing of walls etc. making good the damages and giving connections, as required.	Metre	200.00	153.00	30600.00
98	ENS 15	**S/F of feeder pillar:** Fabrication, supplying and fixing of outdoor, cubical type water proof feeder pillar (120 x 70 x 30 cm) with rain cap at the top, made out of 2mm thick M.S sheet, powder coated in suitable colour over a coat of primer with provision for fixing MCCB DB / TPN DB with sufficient clearance, detachable gland plate at bottom, having single door with lockable knob, providing danger notice board on the front door, fixing using suitable size 'C' channel, including all minor civil works etc, as required	Each	4.00	8170.00	32680.00
99	ENS 16	**S/F Street Light Pole :** Supply and fixing of Hot dipped Galvanised, continuosly tapered pole made from 3 mm thick sheet of overall length 6 metre with decorative arm bracket of 1.00 m length, 48mm dia x 3.25mm thick with standard arm cap. The bottom dia of the pole shall be minimum 130 mm and top 70 mm with inbuilt cable loop in loop out box, 6A SP C curve MCB, loop in loop out 3 phase terminals block, flush door and locking facility.The pole shall be with base plate of 200x200x12mm and 4 nos M20 x 600 mm size of foundation bolt. The pole shall be mounted on existing suitable size foundation and provide required dia PVC pipe in the foundation for taking cable in & out from the pole including 3core 1.5 sq: mm unarmounred PVC insulated round copper cable from loop in loop out to light fixture etc with all required accessories. (The cost of the civil foundation is not considered in this item.)	Each	41.00	18697.00	766577.00
100	ENS 17	**Erection of tubular street light pole:** Erection of tubular street light pole using 4 nos 20 mm MS rods with threads, nut etc of length 130 cm, 2 nos 300 x 300 x 6 mm MS plate welded at bottom & top of the MS rods, concreting with 45 x 45 x 100 cm up to ground level and 30 x 30 x 30cm above ground level using 8 mm steel reinforcement with cement concrete of 1:2:4, after excavation and plastering the sides using a neat cement flushing coat, painting with cement paint etc, as required.	Each	41.00	4032.00	165312.00
101	ENS 18	**SITC of 3phase KSEB Meter board :** Fabrication, supply, Installation, testing & commissioning one number cubicle type energy meter board made out of 2 mm thick MS sheet, Powder coated, including provision for fixing KSEB 3 phase energymeter, providing & fixing of 3 nos 63A cut out fuses, neutral link and one number 63A 4P Isolator and provision for locking the incoming & Metering section etc, as required.	Each	1.00	9000.00	9000.00

SL NO	DSR No.	DESCRIPTION	Unit	Qty	Rate	Amount
102	ENS 19	**DOCUMENTS & APPROVAL :** Preparation of necessary forms, documents drawings etc. with necessary certifications & test reports and procuring approval from Kerala state Electricity Board / Electrical Inspectorate, including all miscelaneous expenses and all related expences & formalities shall be met by contractor but excluding statutory charges, cash deposit etc.	Job	1.00	5000.00	5000.00
		Total for Non Schedule Items (Electrical)				**1565863.00**
		Total for Electrical works				**2279097.65**
		GRAND TOTAL				**15210438.12**

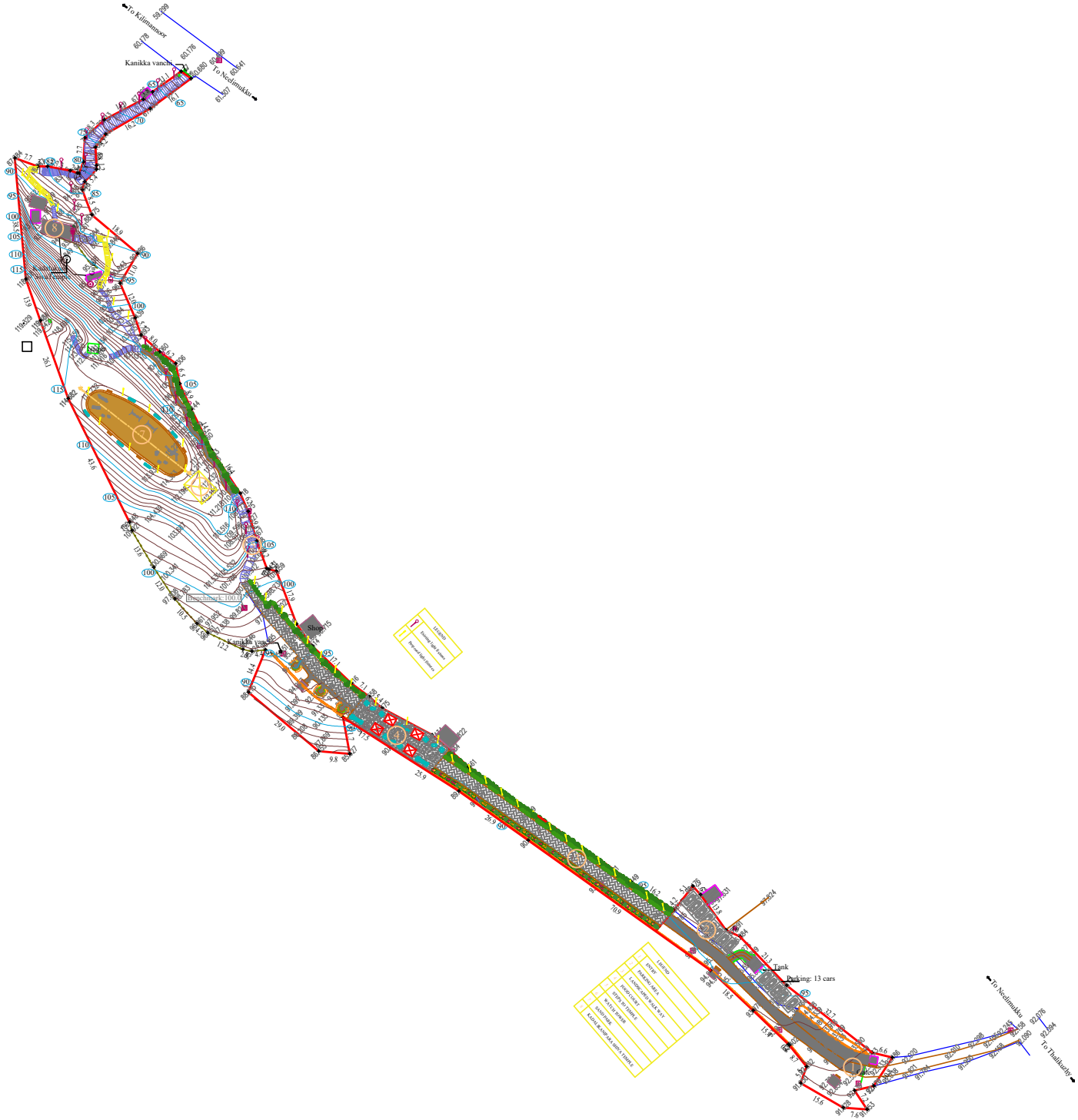
To Kilimannoor
Kanikka vanchi
To Neelimukku
Kanikka vanchi
Benchmark: 100.0
Shop
Tank
Parking: 13 cars
To Neelimukku
To Thalikuzhy
LEGEND
ENTRY
PARKING AREA
LANDSCAPED WALK WAY
FOOD COURT
STEPS BY TEMPLE
WATER RIVER
SAND PARK
KADAL KANDPARA SHIVA TEMPLE

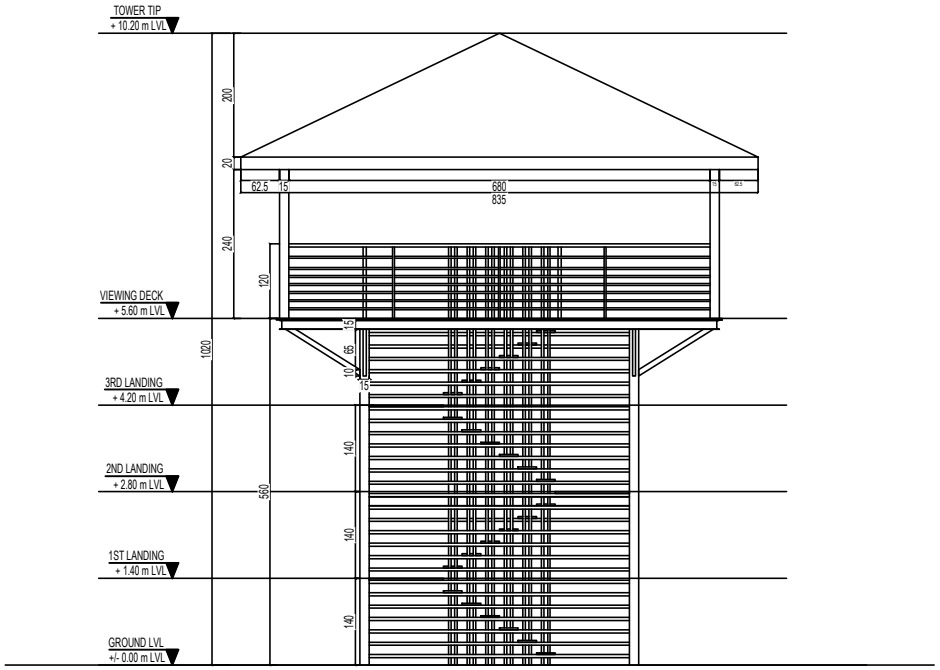

ELEVATION

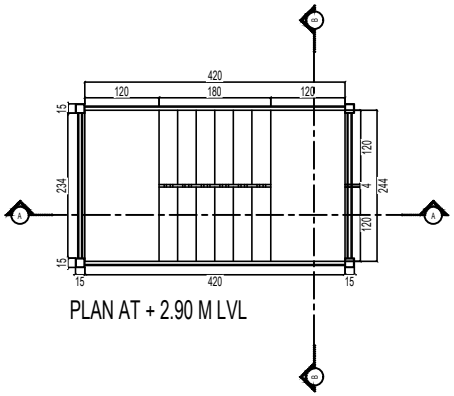

PLAN AT + 2.90 M LVL

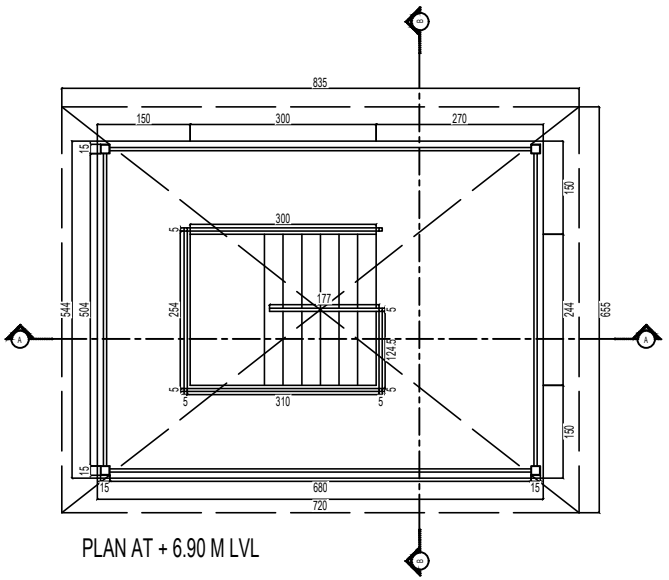

PLAN AT + 6.90 M LVL

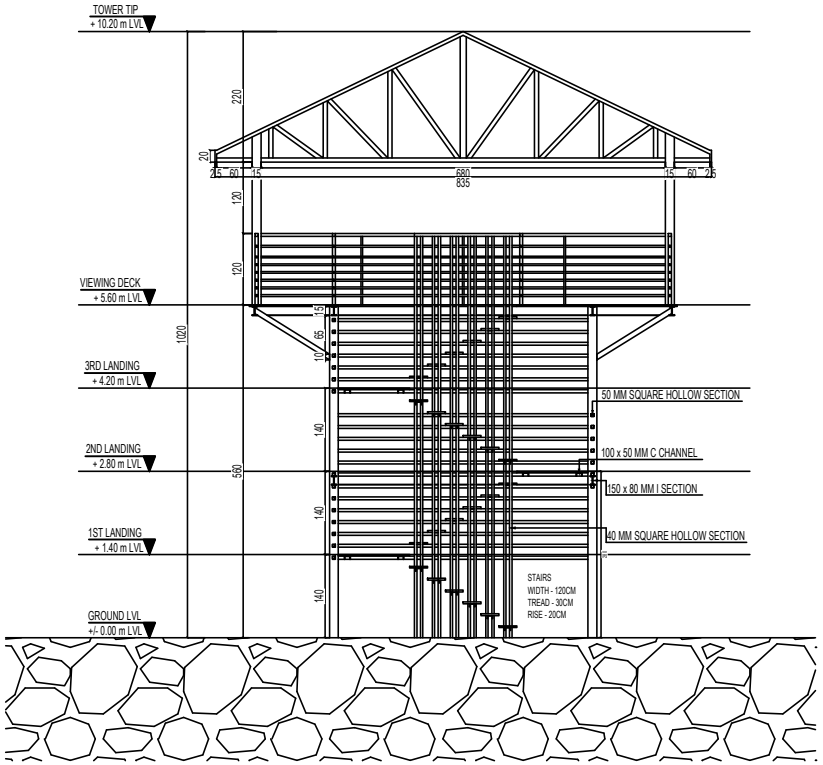

SECTION - AA

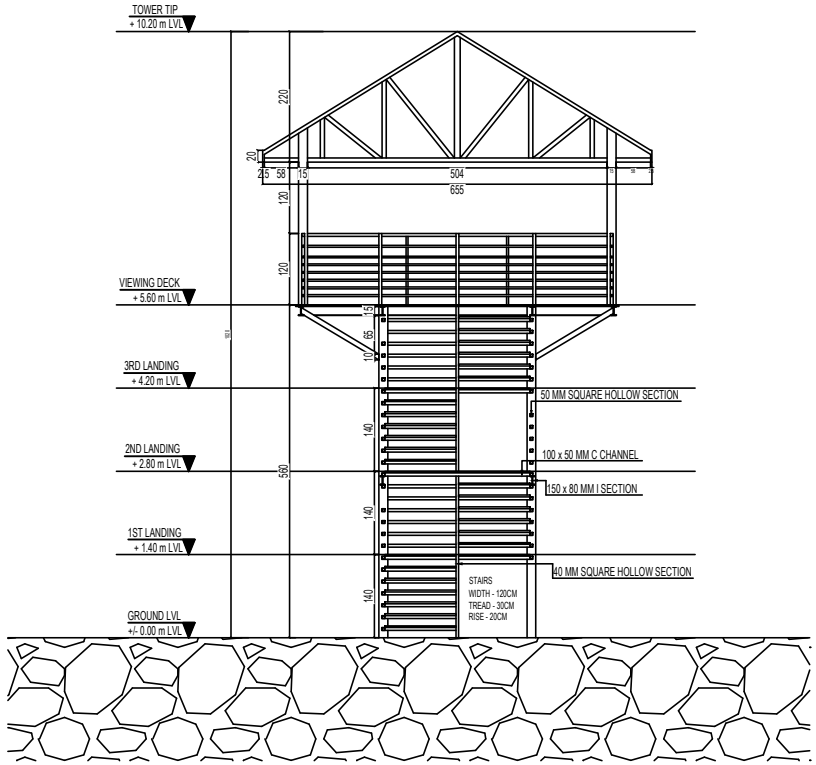

SECTION - BB

150 YEARS OF CELEBRATING THE MAHATMA

सत्यमेव जयते

स्वच्छ भारत
एक कदम स्वच्छता की ओर

संविदा की सामान्य शर्तें निर्माण कार्य

GENERAL CONDITIONS OF CONTRACT 2020

CONSTRUCTION WORKS

केन्द्रीय लोक निर्माण विभाग
CENTRAL PUBLIC WORKS DEPARTMENT

Incorporating Amendments upto Circular bearing No. DG/CON/ 308 dt. 05.12.2019

165 Years of Engineering Excellence

CPWD

Percentage Rate / Item Rate Tender & Contract

प्रतिशत दर/मद दर निविदा एवं संविदा

Index / सूची

Sl. No. / क्रम सं	Details / विवरण	Page/ पृष्ठ
1	General Guidelines – सामान्य दिशानिर्देश	2
2	Tender Form CPWD-7/8 – निविदा फार्म के.लो.नि.वि. 7/8	3 – 4
3	General Rules and Directions – सामान्य नियम एवं निदेश	5 – 8
4	Conditions of Contract – संविदा की शर्तें	9 – 11
5	Clauses of Contract – संविदा के खंड	12 – 55
6	Integrity Pact – सत्यनिष्ठा संधि	56 – 62
7	CPWD Safety Code – के.लो.नि.वि. सुरक्षा संहिता	63 – 67
8	Model Rules for the Protection of Health and Sanitary Arrangements for Workers – श्रमिकों के लिए स्वास्थय तथा स्वच्छता व्यवस्था की सुरक्षा के लिए आर्दश नियम	68 – 72
9	CPWD Contractor's Labour Regulations – के.लो.नि.वि. ठेकेदार के श्रमिक विनियम	73 – 77
10	Proforma of Registers (Appendix-I to Appendix-XVI) – रजिस्टरों के प्रारूप (परिशिष्ट–1 से परिशिष्ट–XVI)	78 – 97
11	Notice of Appointment of Arbitrator (Appendix-XVII) – मध्यस्थ की नियुक्ति के लिए नोटिस (परिशिष्ट–XVII)	98
12	Form of Earnest Money Deposit Bank Guarantee Bond – बयाना धनराशि जमा बैंक गारंटी बंधपत्र का फॉर्म	99
13	Form of Performance Security Bank Guarantee Bond Format - I – निष्पादन प्रतिभूति बैंक गारंटी बंधपत्र - I का फॉर्म	100
14	Form of Performance Security Bank Guarantee Bond Format - II – निष्पादन प्रतिभूति बैंक गारंटी बंधपत्र - II का फॉर्म	101
15	Proforma of Schedules A to F – क से च तक अनुसूचियों के प्रारूप	102 – 107
16	Annexure Showing Quantities of Materials for Areas of Surfacing to be Considered for Working out Minimum Period of Road Roller – रोड रोलर की न्यूनतम अविध का पता लगाने के लिए विचाराधीन सर्फेसिंग के क्षेत्रों के लिए सामग्रियों की मात्रा दर्शाने वाला परिशिष्ट	108 – 109

GENERAL GUIDELINES

1. This book of "General Conditions of Contract" is applicable to both types of tenders i.e. "Percentage rate tenders and Item rate tenders". Accordingly, alternative provisions for conditions Nos. 4A, 9 & 10 of the General Rules and Directions are given in this book. The appropriate alternatives will be applicable in specific cases depending on whether this is used for percentage rate tender (CPWD-7) or item rate tender (CPWD-8).

2. CPWD-6, Schedules A to F, special conditions/specifications and drawings etc. will be part of NIT and shall be uploaded.

3. The intending bidders will quote their rates in Schedule A and schedule A to F and performa for registers are only for information and guidance.

4. Authority approving the Notice Inviting Tenders (NIT) shall fill up all the blanks in CPWD-6 and in Schedules B to F before issue of Tender Papers.

5. The intending bidders will quote their rates in Schedule A.

6. The proforma for registers and Schedules A to F are only for information and guidance. These are not to be filled in the Standard Form. The Schedules with all blanks, duly filled, shall be separately issued to all intending tenderers.

Note :- In case of any discrepancies between Hindi and English version, English version will prevail.

CPWD - 7/8

GOVERNMENT OF INDIA
CENTRAL PUBLIC WORKS DEPARTMENT

Percentage Rate Tender/Item Rate Tender & Contract for Works

(A) Tender for the work of :-

.....

.....

(i) To be uploaded by……. hours on ……. to/upload at

(ii) To be opened in presence of tenderers who may be present at ……. hours on ……. in the office of .....

TENDER

I/We have read and examined the notice inviting tender, schedule, A, B, C, D, E & F Specifications applicable, Drawings & Designs, General Rules and Directions, Conditions of Contract, clauses of contract, Special conditions, Schedule of Rate & other documents and Rules referred to in the conditions of contract and all other contents in the tender document for the work.

I/We hereby tender for the execution of the work specified for the President of India within the time specified in Schedule 'F' viz., schedule of quantities and in accordance in all respect with the specifications, designs, drawing and instructions in writing referred to in Rule-1 of General Rules and Directions and in Clause 11 of the Conditions of contract and with such materials as are provided for, by, and in respect of accordance with, such conditions so far as applicable.

I/We agree to keep the tender open for ..... days from the due date of its opening in case of single bid system ……. from the date of opening of technical bid in case tenders are invited on 2 /3 bid/ system for specialised work and not to make any modification in its terms and conditions.

A sum of Rs. …… is hereby forwarded in cash/receipt treasury challan/deposit at call receipt of a scheduled bank/fixed deposit receipt of scheduled bank/demand draft of a scheduled bank/bank guarantee issued by a scheduled bank as earnest money.

A copy of earnest money in receipt treasury challan/deposit at call receipt of a scheduled bank/fixed deposit receipt of scheduled bank/demand draft of a scheduled bank/bank guarantee issued by a scheduled bank is scanned and uploaded (strike out as the case may be). If I/We, fail to furnish the prescribed performance performance guarantee within prescribed period, I/We agree that the said President of India or his successors, in office shall without prejudice to any other right or remedy, be at liberty to forfeit the said earnest money absolutely. Further, if I/We fail to commence work as specified, I/ We agree that President of India or the successors in office shall without prejudice to any other right or remedy available in law, be at liberty to forfeit the said performance guarantee absolutely. The said Performance Guarantee shall be a guarantee to execute all the works referred to in the tender documents upon the terms and conditions contained or referred to those in excess of that limit at the rates to be determined in accordance with the provision contained in Clause 12.2 and 12.3 of the tender form.

Further, I/We agree that in case of forfeiture of Earnest Money or Performance Guarantee as aforesaid, I/We shall be debarred for participation in the re-tendering process of the work.

I/We undertake and confirm that eligible similar work(s) has/have not been got executed through another contractor on back to back basis. Further that, if such a violation comes to the notice of Department, then I/We shall be debarred for tendering in CPWD in future forever. Also, if such a violation comes to the notice of Department before date of start of work, the Engineer-in-Charge shall be free to forfeit the entire amount of Earnest Money Deposit/Performance Guarantee.

I/We hereby declare that I/We shall treat the tender documents drawings and other records connected with the work as secret/confidential documents and shall not communicate information/derived there from to any person other than a person to whom I/We am/are authorized to communicate the same or use the information in any manner prejudicial to the safety & integrity of the State.

Dated
Witness:

Signature of Contractor
Postal Address

Address:
Occupation:

A C C E P T A N C E

The above tender (as modified by you as provided in the letters mentioned hereunder) is accepted by me for and on behalf of the President of India for a sum of Rs. …….....

(Rupees .....

.....)

The letters referred to below shall form part of this contract agreement:-

(a)

(b)

(c)

For & on behalf of the President of India.

Signatures .....

Dated:

Designation .....

GOVERNMENT OF INDIA
CENTRAL PUBLIC WORKS DEPARTMENT

General Rules & Directions

1. All work proposed for execution by contract will be notified in a form of invitation to tender pasted by publication in News papers or posted on website as the case may be.This form will state the work to be carried out, as well as the date for submitting and opening tenders and the time allowed for carrying out the work, also the amount of earnest money to be deposited with the tender, and the amount of the security deposit and Performance guarantee to be deposited by the successful tenderer and the percentage, if any, to be deducted from bills. Copies of the specifications, designs and drawings and any other documents required in connection with the work signed for the purpose of identification by the officer inviting tender shall also be open for inspection by the contractor at the office of officer inviting tender during office hours.

2. In the event of tender being submitted by a firm, it must be signed separately by each partner thereof or in the event of the absence of any partner, it must be signed on his behalf by a person holding a power of attorney authorizing him to do so, such power of attorney to be produced with the tender, and it must disclose that the firm is duly registered under the Indian Partnership Act 1952.

3. Receipts for payment made on account of work, when executed by a firm, must also be signed by all the partners, except where contractors are described in their tender as a firm, in which case the receipts must be signed in the name of the firm by one of the partners, or by some other person having due authority to give effectual receipts for the firm.

Applicable for Item Rate Tender only (CPWD - 8)

4. The rate(s) must be quoted in decimal coinage. Amounts must be quoted in full rupees by ignoring fifty paisa and considering more than fifty paisa as rupee one.

   In case the lowest tendered amount (worked out on the basis of quoted rate of Individual items) of two or more contractors is same, then such lowest contractors may be asked to submit sealed revised offer quoting rate of each item of the schedule of quantity for all sub sections/sub heads as the case may be, but the revised quoted rate of each item of schedule of quantity for all sub sections/sub heads should not be higher than their respective original rate quoted already at the time of submission of tender. The lowest tender shall be decided on the basis of revised offer.

   If the revised tendered amount (worked out on the basis of quoted rate of individual items) of two or more contractors received in revised offer is again found to be equal, then the lowest tender, among such contractors, shall be decided by draw of lots in the presence of SE of the circle, or CE of the zone EE(s) in-charge of major & minor component(s) (also DDH in case Horticulture work is also included in the tender), and the lowest contractors those have quoted equal amount of their tenders.

In case of any such lowest contractor in his revised offer quotes rate of any item more than their respective original rate quoted already at the time of submission of tender, then such revised offer shall be treated invalid. Such case of revised offer of the lowest contractor or case of refusal to submit revised offer by the lowest contractor shall be treated as withdrawal of his tender before acceptance and 50% of his earnest money shall be forfeited.

In case all the lowest contractors those have same tendered amount (as a result of their quoted rate of individual items), refuse to submit revised offers, then tenders are to be recalled after forfeiting 50% of EMD of each lowest contractors.

Contractor, whose earnest money is forfeited because of non-submission of revised offer, or quoting higher revised rate(s) of any item(s) than their respective original rate quoted already at the time of submission of his bid shall not be allowed to participate in the retendering process of the work.

Applicable for Percentage Rate Tender only

4A. In case of Percentage Rate Tenders, contractor shall fill up the usual printed form, stating at what percentage below/above (in figures as well as in words) the total estimated cost given in Schedule of Quantities at Schedule-A, he will be willing to execute the work. The tender submitted shall be treated as invalid if :-

I. The contractor does not quote percentage above/below on the total amount of tender or any section/sub head of the tender.

II. The percentage above/below is not quoted in figures & words both on the total amount of tender or any section/sub head of the tender.

III. The percentage quoted above/below is different in figures & words on the total amount of tender or any section/sub head of the tender.

Tenders, which propose any alteration in the work specified in the said form of invitation to tender, or in the time allowed for carrying out the work, or which contain any other conditions of any sort including conditional rebates, will be summarily rejected.

4B. In case the lowest tendered amount (estimated cost $\pm$ amount worked on the basis of percentage above/below) of two or more contractors is same, such lowest contractors will be asked to submit sealed revised offer in the form of letter mentioning percentage above/ below on estimated cost of tender including all sub sections/sub heads as the case may be, but the revised percentage quoted above/below on tendered cost or on each sub section/ sub head should not be higher than the percentage quoted at the time of submission of tender. The lowest tender shall be decided on the basis of revised offers.

In case any of such contractor refuses to submit revised offer, then it shall be treated as withdrawal of his tender before acceptance and 50% of earnest money shall be forfeited.

If the revised tendered amount of two more contractors received in revised offer is again found to be equal, the lowest tender, among such contractors, shall be decided by draw of lots in the presence of SE of the circle, or CE of the zone EE(s) in-charge of major & minor component(s) (also DDH in case Horticulture work is also included in the tender), & the lowest contractors those have quoted equal amount of their tenders.

In case all the lowest contractors those have quoted same tendered amount, refuse to submit revised offers, then tenders are to be recalled after forfeiting 50% of EMD of each contractor.Contractor(s), whose earnest money is forfeited because of non-submission of revised offer, shall not be allowed to participate in the re-tendering process of the work.

5. The officer inviting tender or his duly authorized assistant, will open tenders in the presence of any intending contractors who may be present at the time.

6. The officer inviting tenders shall have the right of rejecting all or any of the tenders and will not be bound to accept the lowest or any other tender.

7. The receipt of an accountant or clerk for any money paid by the contractor will not be considered as any acknowledgment or payment to the officer inviting tender and the contractor shall be responsible for seeing that he procures a receipt signed by the officer inviting tender or a duly authorized Cashier.

Applicable for Item Rate Tender only (CPWD - 8)

8. In the case of Item Rate Tenders, only rates quoted shall be considered. Any tender containing percentage below/above the rates quoted is liable to be rejected. Rates quoted by the contractor in item rate tender in figures and words shall be accurately filled in so that there is no discrepancy in the rates written in figures and words. However, if a discrepancy is found, the rates which correspond with the amount worked out by the contractor shall unless otherwise proved be taken as correct. If the amount of an item is not worked out by the contractor or it does not correspond with the rates written either in figures or in words, then the rates quoted by the contractor in words shall be taken as correct. Where the rates quoted by the contractor in figures and in words tally, but the amount is not worked out correctly, the rates quoted by the contractor will unless otherwise proved be taken as correct and not the amount. In event no rate has been quoted for any item(s), leaving space both in figure(s), word(s), and amount blank, it will be presumed that the contractor has included the cost of this/these item(s) in other items and rate for such item(s) will be considered as zero and work will be required to be executed accordingly.

However, if a tenderer quotes nil rates against each item in item rate tender, the tender shall be treated as invalid and will not be considered as lowest tenderer and earnest money deposited shall be forfeited.

Applicable for percentage Rate Tender only (CPWD - 7)

9. In case of Percentage Rate Tenders only percentage quoted shall be considered. Any tender containing item rates is liable to be rejected. Percentage quoted by the contractor in percentage rate tender shall be accurately filled in figures and words, so that there is no discrepancy.

Applicable for Percentage Rate Tender only (CPWD - 7)

10. In Percentage Rate Tender, the tenderer shall quote percentage below/above (in figures as well as in words) at which he will be willing to execute the work. He shall also work out the total amount of his offer and the same should be written in figures as well as in words in such a way that no interpolation is possible. In case of figures, the word 'Rs.' should be written before the figure of rupees and word 'P' after the decimal figures, e.g. 'Rs. 2.15P and in case of words, the word 'Rupees' should precede and the word 'Paisa' should be written at the end.

11. (i) The Contractor whose tender is accepted, will be required to furnish performance guarantee of 5% (Five Percent) of the tendered amount within the period specified in Schedule F. This guarantee shall be in the form of cash (in case guarantee amount is less than Rs. 10,000/-) or Deposit at call receipt of any scheduled bank/Banker's cheque of any scheduled bank/Demand Draft of any scheduled

bank/Pay order of any scheduled bank (in case guarantee amount is less than Rs. 1,00,000/-) or Government Securities or Fixed Deposit Receipts or Guarantee Bonds of any Scheduled Bank

(ii) The contractor whose tender is accepted will also be required to furnish by way of Security Deposit for the fulfillment of his contract, an amount equal to 2.5% of the tendered value of the work. The Security deposit will be collected by deductions from the running bills as well as final bill of the contractor at the rates mentioned above. The Security amount will also be accepted in cash or in the shape of Government Securities. Fixed Deposit Receipt of a Scheduled Bank or will also be accepted for this purpose provided confirmatory advice is enclosed.

12. On acceptance of the tender, the name of the accredited representative(s) of the contractor who would be responsible for taking instructions from the Engineer-in-Charge shall be communicated in writing to the Engineer-in-Charge.

13. GST or any other tax applicable in respect of inputs procured by the contractor for this contract shall be payable by the Contractor and Government will not entertain any claim whatsoever in respect of the same. However, component of GST at time of supply of service (as provided in CGST Act 2017) provided by the contract shall be varied if different from that applicable on the last date of receipt of tender including extension if any.

14. The contractor shall give a list of both gazetted and non-gazetted C.P.W.D. employees related to him.

15. The tender for composite work includes, in addition to building work, all other works such as sanitary and water supply installations drainage installation, electrical work, horticulture work, roads and paths etc.

16. The contractor shall submit list of works which are in hand (progress) in the following form:-

Name of work	Name and particulars of Divn where work is being executed	Value of work	Position of works in	Remarks
1.	2.	3.	4.	5.

CONDITIONS OF CONTRACT

Definitions

1. The **Contract** means the documents forming the tender and acceptance thereof and the formal agreement executed between the competent authority on behalf of the President of India and the Contractor, together with the documents referred to therein including these conditions, the specifications, designs, drawings and instructions issued from time to time by the Engineer-in- Charge and all these documents taken together, shall be deemed to form one contract and shall be complementary to one another.

2. In the contract, the following expressions shall, unless the context otherwise requires, have the meanings, hereby respectively assigned to them:-

   (i) The expression **works** or **work** shall, unless there be something either in the subject or context repugnant to such construction, be construed and taken to mean the works by or by virtue of the contract contracted to be executed whether temporary or permanent, and whether original, altered, substituted or additional.

   (ii) The **Site** shall mean the land, places on, into or or where work is to be executed under the contract or any adjacent land, path or street or where work is to be executed under the contract or any adjacent land, path or street which may be temporally allotted or used for the purpose of carrying out the contract.

   (iii) The **Contractor** shall mean the individual, firm or company, whether incorporated or not, undertaking the works and shall include the legal personal representative of such individual or the persons composing such firm or company, or the successors of such firm or company and the permitted assignees of such individual, firm or company.

   (iv) The **President** means the President of India and his successors.

   (v) **Government** or **Government of India** shall mean the President of India.

   (vi) The **Engineer-in-charge** means the Engineer Officer who shall supervise and be in charge of the work and who shall sign the contract on behalf of the President of India as mentioned in Schedule 'F' hereunder.

   (vii) The term **Director General** includes Special Director General/Additional Director General/Chief Engineer.

   (viii) **Accepting Authority** shall mean the authority mentioned in Schedule 'F'.

   (ix) **Excepted Risk** are risks due to riots (other than those on account of contractor's employees), war (whether declared or not) invasion, act of foreign enemies, hostilities, civil war, rebellion revolution, insurrection, military or usurped power, any acts of Government, damages from aircraft, acts of God, such as earthquake, lightening and unprecedented floods, and other causes over which the contractor has no control and accepted as such by the Accepting Authority or causes solely due to use or occupation by Government of the part of the works in respect of which a certificate of completion has been issued or a cause solely due to Government's faulty design of works.

   (x) **Market Rate** shall be the rate as decided by the Engineer-in-Charge on the basis of the cost of materials and labour at the site where the work is to be executed plus the percentage mentioned in Schedule 'F' to cover, all overheads and profits.

Provided that no extra overheads and profits shall be payable on the part(s) of work assigned to other agency(s) by the contractor as per terms of contract.

Schedule(s) referred to in these conditions shall mean the relevant schedule(s) annexed to the tender documents or the standard Schedule of Rates of the government mentioned in Schedule 'F' hereunder, with the amendments thereto issued upto the date of receipt of the tender.

(xi) **Department** means CPWD or any department of Government of India which invites tenders on behalf of President of India as specified in schedule 'F'.

(xii) **District Specifications** means the specifications followed by the State Government in the area where the work is to be executed.

(xiii) **Tendered value** means the value of the entire work as stipulated in the letter of award.

(xiv) **Date of commencement of work:** The date of commencement of work shall be the date of start as specified in schedule 'F' or the first date of handing over of the site, whichever is later, in accordance with the phasing if any, as indicated in the tender document.

(xv) **GST** shall mean Goods and Service Tax - Central, State and Inter State.

Scope and Performance

3. Where the context so requires, words imparting the singular only also include the plural and vice versa. Any reference to masculine gender shall whenever required include feminine gender and vice versa.

4. Headings and Marginal notes to these General Conditions of Contract shall not be deemed to form part thereof or be taken into consideration in the interpretation or construction thereof or of the contract.

5. The contractor shall be furnished, free of cost one certified copy of the contract documents except standard specifications, Schedule of Rates and such other printed and published documents, together with all drawings as may be forming part of the tender documents . None of these documents shall be used for any purpose other than that of this contract.

Works to be carried out

6. The work to be carried out under the Contract shall, except as otherwise provided in these conditions, include all labourers, materials, tools, plants, equipment and transport which may be required in preparation of and for and in the full and entire execution and completion of the works. The descriptions given in the Schedule of Quantities (Schedule-A) shall, unless otherwise stated, be held to include wastage on materials, carriage and cartage, carrying and return of empties, hoisting, setting, fitting and fixing in position and all other labours necessary in and for the full and entire execution and completion of the work as aforesaid in accordance with good practice and recognized principles.

Sufficiency of Tender

7. The Contractor shall be deemed to have satisfied himself before tendering as to the correctness and sufficiency of his tender for the works and of the rates and prices quoted in the Schedule of Quantities, which rates and prices shall, except as otherwise provided, cover all his obligations under the Contract and all matters and things necessary for the proper completion and maintenance of the works.

Discrepancies and Adjustment of Errors

8. The several documents forming the Contract are to be taken as mutually explanatory of one another, detailed drawings being followed in preference to small scale drawing and figured dimensions in preference to scale and special conditions in preference to General Conditions.

8.1 In the case of discrepancy between the schedule of Quantities, the Specifications and/ or the Drawings, the following order of preference shall be observed:-

(i) Description of Schedule of Quantities.

(ii) Particular Specification and Special Condition, if any.

(iii) Drawings.

(iv) CPWD Specifications.

(v) Indian Standard Specifications of B.I.S.

8.2 If there are varying or conflicting provisions made in any one document forming part of the contract, the Accepting Authority shall be the deciding authority with regard to the intention of the document and his decision shall be final and binding on the contractor.

8.3 Any error in description, quantity or rate in Schedule of Quantities or any omission therefrom shall not vitiate the Contract or release the Contractor from the execution of the whole or any part of the works comprised therein according to drawings and specifications or from any of his obligations under the contract.

Signing of Contract

9. The successful tenderer/contractor, on acceptance of his tender by the Accepting Authority, shall, within 15 days from the stipulated date of start of the work, sign the contract consisting of:-

(i) the notice inviting tender, all the documents including drawings, if any, forming the tender as issued at the time of invitation of tender and acceptance thereof together with any correspondence leading thereto.

(ii) Standard C.P.W.D. Form as mentioned in Schedule 'F' consisting of:

(a) Various standard clauses with corrections up to the date stipulated in Schedule 'F' along with annexures thereto.

(b) C.P.W.D. Safety Code.

(c) Model Rules for the protection of health, sanitary arrangements for workers employed by CPWD or its contractors.

(d) CPWD Contractor's Labour Regulations.

(e) List of Acts and omissions for which fines can be imposed.

(iii) No payment for the work done will be made unless contract is signed by the contractor.

GENERAL CONDITION OF CONTRACT

CLAUSES OF CONTRACT

Clause 1

Performance Guarantee

(i) The contractor shall submit an irrevocable Performance Guarantee of 5% (Five percent) of the tendered amount in addition to other deposits mentioned elsewhere in the contract for his proper performance of the contract agreement, (not withstanding and/or without prejudice to any other provisions in the contract) within period specified in Schedule 'F' from the date of issue of letter of acceptance. This period can be further extended by the Engineer-in-Charge up to a maximum period as specified in schedule 'F' on written request of the contractor stating the reason for delays in procuring the Performance Guarantee, to the satisfaction of the Engineer-in-Charge. This guarantee shall be in the form of Cash (in case guarantee amount is less than Rs. 10,000/-) or Deposit at Call receipt of any scheduled bank/Banker's Cheque of any scheduled bank/Demand Draft of any scheduled bank/Pay Order of any scheduled bank (in case guarantee amount is less than Rs. 1,00,000/-) or Government Securities or Fixed Deposit Receipts or Guarantee Bonds of any Scheduled Bank or the State Bank of India in accordance with the form annexed hereto. In case a fixed deposit receipt of any Bank is furnished by the contractor to the Government as part of the performance guarantee and the Bank is unable to make payment against the said fixed deposit receipt, the loss caused thereby shall fall on the contractor and the contractor shall forthwith on demand furnish additional security to the Government to make good the deficit.

(ii) The Performance Guarantee shall be initially valid up to the stipulated date of completion plus minimum 60 days beyond that, if the same is submitted by the agency on scheduled format I as per GCC. If the same is submitted on the format II as per GCC, then the Performance Guarantee shall be valid up to the stipulated date of completion plus minimum 6 months beyond that. In case the time for completion of work gets enlarged, the contractor shall get the validity of Performance Guarantee extended to cover such enlarged time for completion of work. After recording of the completion certificate for the work by the competent authority, the performance guarantee shall be returned to the contractor, without any interest. However, in case of contracts involving maintenance of building and services/any other work after construction of same building and services/other work, then 50% of Performance Guarantee shall be retained as Security Deposit. The same shall be returned year wise proportionately.

(iii) The Engineer-in-Charge shall make a claim under the performance guarantee except for amounts to which the President of India is entitled under the contract (not withstanding and/or without prejudice to any other provisions in the contract agreement) in the event of:

(a) Failure by the contractor to extend the validity of the Performance Guarantee as described herein above, in which event the Engineer-in-Charge may claim the full amount of the Performance Guarantee.

(b) Failure by the contractor to pay President of India any amount due, either as agreed by the contractor or determined under any of the Clauses/Conditions of the agreement, within 30 days of the service of notice to this effect by Engineer-in-Charge.

(iv) In the event of the contract being determined or rescinded under provision of any of the Clause/Condition of the agreement, the performance guarantee shall stand forfeited in full and shall be absolutely at the disposal of the President of India.

(v) On substantial Completion of any work which has been completed to such an extent that the intended purpose of the work is met and ready to use, then a provisional Completion certificate shall be recorded by the Engineer-in-Charge. The provisional certificate shall have appended with a list of outstanding balance item of work that need to be completed in accordance with the provisions of the contract.

This provisional completion certificate shall be recorded by the concerned Engineer-in-charge with the approval of Superintending Engineer /Project Manager / Chief Engineer/Chief Project Manager, if required. After recording of the provisional Completion Certificate for the work by the competent authority, the 80 % of performance guarantee shall be returned to the contractor, without any interest.

However in case of contracts involving Maintenance of building and services /any other work after construction of same building and services/ other work, then 40% of performance guarantee shall be returned to the contractor, without any interest after recording the provisional Completion certificate.

Clause 1 A

Recovery of Security Deposit

The person/persons whose tender(s) may be accepted (hereinafter called the contractor) shall permit Government at the time of making any payment to him for work done under the contract to deduct a sum at the rate of 2.5% of the gross amount of each running and final bill till the sum deducted will amount to security deposit of 2.5% of the tendered value of the work. Such deductions will be made and held by Government by way of Security Deposit unless he/they has/have deposited the amount of Security at the rate mentioned above in cash or in the form of Government Securities or fixed deposit receipts. In case a fixed deposit receipt of any Bank is furnished by the contractor to the Government as part of the security deposit and the Bank is unable to make payment against the said fixed deposit receipt, the loss caused thereby shall fall on the contractor and the contractor shall forthwith on demand furnish additional security to the Government to make good the deficit.

All compensations or the other sums of money payable by the contractor under the terms of this contract may be deducted from, or paid by the sale of a sufficient part of his security deposit or from the interest arising there from, or from any sums which may be due to or may become due to the contractor by Government on any account whatsoever and in the event of his Security Deposit being reduced by reason of any such deductions or sale as aforesaid, the contractor shall within 10 days make good in cash or fixed deposit receipt tendered by the State Bank of India or by Scheduled Banks or Government Securities (if deposited for more than 12 months) endorsed in favour of the Engineer-in-Charge, any sum or sums which may have been deducted from, or raised by sale of his security deposit or any part thereof. The security deposit shall be collected from the running bills and the final bill of the contractor at the rates mentioned above.

The security deposit as deducted above can be released against bank guarantee issued by a scheduled bank, on its accumulations to a minimum of Rs. 5 lac subject to the condition that amount of such bank guarantee, except last one, shall not be less than Rs. 5 lac. Provided further that the validity of bank guarantee including the one given against the earnest money shall be in conformity with provisions contained in clause 17 which shall be extended from time to time depending upon extension of contract granted under provisions of clause 2 and clause 5.

In case of contracts involving maintenance of building and services/any other work after construction of same building and services/other work, then 50% of Performance Guarantee shall be retained as Security Deposit. The same shall be returned year wise proportionately.

Note-1: Government papers tendered as security will be taken at 5% (five per cent) below its market price or at its face value, whichever is less. The market price of Government paper would be ascertained by the Divisional Officer at the time of collection of interest and the amount of interest to the extent of deficiency in value of the Government paper will be withheld if necessary.

Note-2: Government Securities will include all forms of Securities mentioned in Rule No. 274 of the G.F. Rules except fidelity bond. This will be subject to the observance of the condition mentioned under the rule against each form of security.

Note-3: Note 1 & 2 above shall be applicable for both clause 1 and 1A

Clause 2

Compensation for Delay

If the contractor fails to maintain the required progress in terms of clause 5 or to complete the work and clear the site on or before the contract or justified extended date of completion as per clause 5 (excluding any extension under Clause 5.5) as well as any extension granted under clauses 12 and 15, he shall, without prejudice to any other right or remedy available under the law to the Government on account of such breach, pay as compensation the amount calculated at the rates stipulated below as the authority specified in schedule 'F' may decide on the amount of accepted Tendered Value of the work for every completed day/ month (as determined) that the progress remains below that specified in Clause 5 or that the work remains incomplete.

(i) Compensation for delay of work — With maximum rate @ 1% (one percent) per month of delay to be computed on per day basis based on quantum of damage suffered due to stated delay on the part of Contractor.

Provided always that the total amount of compensation for delay to be paid under this condition shall not exceed 10 % (ten percent) of the accepted Tendered Value of work or of the accepted Tendered Value of the Sectional part of work as mentioned in Schedule 'F' for which a separate period of completion is originally given.

In case no compensation has been decided by the authority in Schedule 'F' during the progress of work, this shall be no waiver of right to levy compensation by the said authority if the work remains incomplete on final justified extended date of completion. If the Engineer in Charge decides to give further extension of time allowing performance of work beyond the justified extended date, the contractor shall be liable to pay compensation for such extended period. If any variation in amount of contract takes place during such extended period beyond justified extended date and the contractor becomes entitled to additional time under clause 12, the net period for such variation shall be accounted for while deciding the period for levy of compensation. However, during such further extended period beyond the justified extended period, if any delay occurs by events under sub clause 5.2, the contractor shall be liable to pay compensation for such delay.

Provided that compensation during the progress of work before the justified extended date of completion for delay under this clause shall be for non-achievement of sectional completion or part handing over of work on stipulated/justified extended date for such part work or if delay affects any other works/services. This is without prejudice to right of action by the Engineer in Charge under clause 3 for delay in performance and claim of compensation under that clause.

In case action under clause 2 has not been finalized and the work has been determined under clause 3, the right of action under this clause shall remain post determination of contract but levy of compensation shall be for days the progress is behind the schedule on date of determination, as assessed by the authority in Schedule F, after due consideration of justified extension. The compensation for delay, if not decided before the determination of contract, shall be decided after of determination of contract.

The amount of compensation may be adjusted or set-off against any sum payable to the Contractor under this or any other contract with the Government. In case, the contractor does not achieve a particular milestone mentioned in schedule F, or the re-scheduled milestone(s) in terms of Clause 5.4, the amount shown against that milestone shall be withheld, to be adjusted against the compensation levied as above. With-holding of this amount on failure to achieve a milestone, shall be automatic without any notice to the contractor. However, if the contractor catches up with the progress of work on the subsequent milestone(s), the withheld amount shall be released. In case the contractor fails to make up for the delay in subsequent milestone(s), amount mentioned against each milestone missed subsequently also shall be withheld. However, no interest, whatsoever, shall be payable on such withheld amount.

Clause 3

When Contract can be Determined

Subject to other provisions contained in this clause, the Engineer-in-Charge may, without prejudice to any other rights or remedy against the contractor in respect of any delay, not following safety norms , inferior workmanship, any claims for damages and/or any other provisions of this contract or otherwise, and whether the date of completion has or has not elapsed, by notice in writing absolutely determine the contract in any of the following cases:

(i) If the contractor having been given by the Engineer-in-Charge a notice in writing to rectify, reconstruct or replace any defective work or that the work is being performed in an inefficient or otherwise improper or un-workman like manner shall omit to comply with the requirement of such notice for a period of seven days thereafter.

(ii) If the contractor has, without reasonable cause, suspended the progress of the work or has failed to proceed with the work with due diligence and continues to do so after a notice in writing of seven days from the Engineer-in-Charge.

(iii) If the contractor fails to complete the work or section of work with individual date of completion on or before the stipulated or justified extended date, on or before such date of completion; and the Engineer in Charge without any prejudice to any other

right or remedy under any other provision in the contract has given further reasonable time in a notice given in writing in that behalf as either mutually agreed or in absence of such mutual agreement by his own assessment making such time essence of contract and in the opinion of Engineer-in-Charge the contractor will be unable to complete the same or does not complete the same within the period specified.

(iv) If the contractor persistently neglects to carry out his obligations under the contract and/ or commits default in complying with any of the terms and conditions of the contract and does not remedy it or take effective steps to remedy it within 7 days after a notice in writing is given to him in that behalf by the Engineer-in-Charge.

(v) If the contractor shall offer or give or agree to give to any person in Government service or to any other person on his behalf any gift or consideration of any kind as an inducement or reward for doing or forbearing to do or for having done or forborne to do any act in relation to the obtaining or execution of this or any other contract for Government.

(vi) If the contractor shall enter into a contract with Government in connection with which commission has been paid or agreed to be paid by him or to his knowledge, unless the particulars of any such commission and the terms of payment thereof have been previously disclosed in writing to the Engineer-in-Charge.

(vii) If the contractor had secured the contract with Government as a result of wrong tendering or other non-bonafide methods of competitive tendering or commits breach of Integrity Agreement.

(viii) If the contractor being an individual, or if a firm, any partner thereof shall at any time be adjudged insolvent or have a receiving order or order for administration of his estate made against him or shall take any proceedings for liquidation or composition (other than a voluntary liquidation for the purpose of amalgamation or reconstruction) under any Insolvency Act for the time being in force or make any conveyance or assignment of his effects or composition or arrangement for the benefit of his creditors or purport so to do, or if any application be made under any Insolvency Act for the time being in force for the sequestration of his estate or if a trust deed be executed by him for benefit of his creditors.

(ix) If the contractor being a company shall pass a resolution or the court shall make an order that the company shall be wound up or if a receiver or a manager on behalf of a creditor shall be appointed or if circumstances shall arise which entitle the court or the creditor to appoint a receiver or a manager or which entitle the court to make a winding up order.

(x) If the contractor shall suffer an execution being levied on his goods and allow it to be continued for a period of 21 days.

(xi) If the contractor assigns (excluding part(s) of work assigned to other agency(s) by the contractor as per terms of contract), transfers, sublets (engagement of labour on a piece-work basis or of labour with materials not to be incorporated in the work, shall not be deemed to be subletting) or otherwise parts with or attempts to assign, transfer, sublet or otherwise parts with the entire works or any portion thereof without the prior written approval of the Engineer -in-Charge. When the contractor has made himself liable for action under any of the cases aforesaid, the Engineer-in-Charge on behalf of the President of India shall have powers:

(a) To determine the contract as aforesaid so far as performance of work by the Contractor is concerned (of which determination notice in writing to the contractor

under the hand of the Engineer-in-Charge shall be conclusive evidence). Upon such determination, Security Deposit already recovered, Security deposit payable and Performance Guarantee under the contract shall be liable to be forfeited and shall be absolutely at the disposal of the Government

(b) After giving notice to the contractor to measure up the work of the contractor and to take such whole, or the balance or part thereof, as shall be un-executed out of his hands and to give it to another contractor to complete the work. The contractor, whose contract is determined as above, shall not be allowed to participate in the tendering process for the balance work including any new items needed to complete the work. In the event of above courses being adopted by the Engineer-in-Charge, the contractor shall have no claim to compensation for any loss sustained by him by reasons of his having purchased or procured any materials or entered into any engagements or made any advances on account or with a view to the execution of the work or the performance of the contract. And in case action is taken under any of the provision aforesaid, the contractor shall not be entitled to recover or be paid any sum for any work thereof or actually performed under this contract unless and until the Engineer-in-Charge has certified in writing the performance of such work and the value payable in respect thereof and he shall only be entitled to be paid the value so certified.

Clause 3 A

In case, the work cannot be started due to reasons not within the control of the contractor within 1/8th of the stipulated time for completion of work or one month whichever is higher, either party may close the contract by giving notice to the other party stating the reasons. In such eventuality, the Performance Guarantee of the contractor shall be refunded within following time limits :

(i)	If the Tendered value of work is up to Rs. 1 Crore	:	15 days.
(ii)	If the Tendered value of work is more than Rs. 1 Crore and upto Rs.10 Crore	:	21 days
(iii)	If the Tendered value of work exceeds Rs. 10 Crore	:	30 days

Neither party shall claim any compensation for such eventuality. This clause is not applicable for any breach of the contract by either party.

Clause 4

Contractor liable to pay compensation even if action not taken under Clause 3

In any case in which any of the powers conferred upon the Engineer-in-Charge by Clause-3 thereof, shall have become exercisable and the same are not exercised, the non-exercise thereof shall not constitute a waiver of any of the conditions hereof and such powers shall notwithstanding be exercisable in the event of any future case of default by the contractor and the liability of the contractor for compensation shall remain unaffected. In the event of the Engineer-in-Charge putting in force all or any of the powers vested in him under the preceding clause he may, if he so desires after giving a notice in writing to the contractor, take possession of (or at the sole discretion of the Engineer-in-Charge which shall be final and binding on the contractor) use as on hire (the amount of the hire money being also in the final determination of the Engineer-in-Charge) all or any tools, plant, materials and stores, in or upon the works, or the site thereof belonging to the contractor, or procured by the contractor and intended to be used for the execution of the work/or any part thereof, paying or allowing for the same in account at the contract rates, or, in the case of these not being applicable,

at current market rates to be certified by the Engineer-in-Charge, whose certificate thereof shall be final, and binding on the contractor, clerk of the works, foreman or other authorized agent to remove such tools, plant, materials, or stores from the premises (within a time to be specified in such notice) in the event of the contractor failing to comply with any such requisition, the Engineer-in-Charge may remove them at the contractor's expense or sell them by auction or private sale on account of the contractor and his risk in all respects and the certificate of the Engineer-in-Charge as to the expenses of any such removal and the amount of the proceeds and expenses of any such sale shall be final and conclusive against the contractor.

Clause 5

Time and Extension for Delay

The time allowed for execution of the Works as specified in the Schedule 'F' or the extended time in accordance with these conditions shall be the essence of the Contract. The execution of the work shall commence from such time period as mentioned in schedule 'F' or from the date of handing over of the site, notified by the Engineer-in-Charge, whichever is later. If the Contractor commits default in commencing the execution of the work as aforesaid, the performance guarantee shall be forfeited by the Engineer in Charge and shall be absolutely at the disposal of the Government without prejudice to any other right or remedy available in law.

5.1 As soon as possible but within 7 (seven) working days of award of work and in consideration of

(a) Schedule of handing over of site as specified in the Schedule 'F'

(b) Schedule of issue of designs as specified in the Schedule 'F' ,

(i) the Contractor shall submit a Time and Progress Chart for each mile stone. The Engineer-in-Charge may within 7 (seven) working days thereafter, if required modify, and communicate the program approved to the contractor failing which the program submitted by the contractor shall be deemed to be approved by the Engineer-in-Charge. The work programme shall include all details of balance drawings and decisions required to complete the contract with specific dates by which these details are required by contractor without causing any delay in execution of the work. The Chart shall be prepared in direct relation to the time stated in the Contract documents for completion of items of the works. It shall indicate the forecast of the dates of commencement and completion of various trades of sections of the work and may be amended as necessary by agreement between the Engineer-in-Charge and the Contractor within the limitations of time imposed in the Contract documents

(ii) In case of non submission of construction programme by the contractor, the program approved by the Engineer-in-Charge shall be deemed to be final.

(iii) The approval by the Engineer-in-Charge of such programme shall not relieve the contractor of any of the obligations under the contract.

(iv) The contractor shall submit the Time and Progress Chart and progress report using the mutually agreed software or in other format decided by Engineer-in-Charge for the work done during previous month to the Engineer-in-charge on or before 5th day of each month failing which a recovery as per Schedule F to be decided by the NIT approving authority shall be made on per week or part basis in case of delay in submission of the monthly progress report.

5.2 If the work(s) be delayed by:-

(i) force majeure, or

(ii) abnormally bad weather, or

(iii) serious loss or damage by fire, or

(iv) civil commotion, local commotion of workmen, strike or lockout, affecting any of the trades employed on the work, or

(v) delay on the part of other contractors or tradesmen engaged by Engineer-in-Charge in executing work not forming part of the Contract, or

(vi) any other cause like above which, in the reasoned opinion of the Engineer-in-Charge is beyond the Contractor's control.

then upon the happening of any such event causing delay, the Contractor shall immediately give notice thereof in writing to the Engineer-in-Charge but shall nevertheless use constantly his best endeavours to prevent or make good the delay and shall do all that may be reasonably required to the satisfaction of the Engineer-in-Charge to proceed with the works.

The contractor shall have no claim of damages for extension of time granted or rescheduling of milestone/s for events listed in sub clause 5.2.

5.3 In case the work is hindered by the Department or for any reason / event, for which the Department is responsible, the authority as indicated in Schedule 'F' shall, if justified, give a fair and reasonable extension of time and reschedule the mile stones for completion of work Such extension of time or rescheduling of milestone/s shall be without prejudice to any other right or remedy of the parties in contract or in law; provided further that for concurrent delays under this sub clause and sub clause 5.2 to the extent the delay is covered under sub clause 5.2 the contractor shall be entitled to only extension of time and no damages.

5.4 Request for rescheduling of Mile stones or extension of time, to be eligible for consideration, shall be made by the Contractor in writing within fourteen days of the happening of the event causing delay on the prescribed forms i.e. Form of application by the contractor for seeking rescheduling of milestones or Form of application by the contractor for seeking extension of time (Appendix -XVI) respectively to the authority as indicated in Schedule 'F'. The Contractor shall indicate in such a request the period by which rescheduling of milestone/s or extension of time is desired. With every request for rescheduling of milestones, or if at any time the actual progress of work falls behind the approved programme by more than 10% of the stipulated period of completion of contract, the contractor shall produce a revised programme which shall include all details of pending drawings and decisions required to complete the contract and also the target dates by which these details should be available without causing any delay in execution of the work. A recovery as specified in Schedule 'F' shall be made on per day basis in case of delay in submission of the revised programme.

5.4.1 In any such case the authority as indicated in Schedule 'F' may give a fair and reasonable extension of time for completion of work or reschedule the mile stones. Engineer -in-Charge shall finalize/ reschedule a particular mile stone before taking an action against subsequent mile stone. Such extension or rescheduling of the milestones shall be communicated to the Contractor by the authority as indicated in Schedule 'F' in writing, within 21 days of the date of receipt of such request from the Contractor in prescribed form. In event of non application by the contractor for extension of time E-in-C after

affording opportunity to the contractor, may give, supported with a programme (as specified under 5.4 above), a fair and reasonable extension within a reasonable period of occurrence of the event.

5.5 In case the work is delayed by any reasons, in the opinion of the Engineer-in-Charge, by the contractor for reasons beyond the events mentioned in clause 5.2 or clause 5.3 or clause 5.4 and beyond the justified extended date; without prejudice to right to take action under Clause 3, the Engineer-in-Charge may grant extension of time required for completion of work without rescheduling of milestones. The contractor shall be liable for levy of compensation for delay for such extension of time.

Clause 6

Computerized Measurement Book

Engineer-in-Charge shall, except as otherwise provided, ascertain and determine by measurement the value of work done in accordance with the contract.

All measurements of all items having financial value shall be entered by the contractor and compiled in the shape of the Computerized Measurement Book having pages of A-4 size as per the format of the department so that a complete record is obtained of all the items of works performed under the contract.

All such measurements and levels recorded by the contractor or his authorized representative from time to time, during the progress of the work, shall be got checked by the contractor from the Engineer-in-Charge or his authorized representative as per interval or program fixed in consultation with Engineer-in-Charge or his authorized representative. After the necessary corrections made by the Engineer-in-Charge, the measurement sheets shall be returned to the contractor for incorporating the corrections and for resubmission to the Engineer-in-Charge for the dated signatures by the Engineer-in- Charge and the contractor or their representatives in token of their acceptance.

Whenever bill is due for payment, the contractor would initially submit draft computerized measurement sheets and these measurements would be got checked/test checked from the Engineer-in-Charge and/or his authorized representative. The contractor will, thereafter, incorporate such changes as may be done during these checks/test checks in his draft computerized measurements, and submit to the department a computerized measurement book, duly bound, and with its pages machine numbered. The Engineer-in- Charge and/or his authorized representative would thereafter check this MB, and record the necessary certificates for their checks/test checks.

The final, fair, computerized measurement book given by the contractor, duly bound, with its pages machine numbered, should be 100% correct, and no cutting or over-writing in the measurements would thereafter be allowed. If at all any error is noticed, the contractor shall have to submit a fresh computerized MB with its pages duly machine numbered and bound, after getting the earlier MB cancelled by the department. Thereafter, the MB shall be taken in the Divisional Office records, and allotted a number as per the Register of Computerized MBs. This should be done before the corresponding bill is submitted to the Division Office for payment. The contractor shall submit two spare copies of such computerized MB's for the purpose of reference and record by the various officers of the department.

The contractor shall also submit to the department separately his computerized Abstract of Cost and the bill based on these measurements, duly bound, and its pages machine numbered along with two spare copies of the "bill. Thereafter, this bill will be processed by the Division Office and allotted a number as per the computerized record in the same way as done for the measurement book meant for measurements.

The contractor shall, without extra charge, provide all assistance with every appliance, labour and other things necessary for checking of measurements/levels by the Engineer-in- Charge or his representative.

Except where any general or detailed description of the work expressly shows to the contrary, measurements shall be taken in accordance with the procedure set forth in the specifications notwithstanding any provision in the relevant Standard Method of measurement or any general or local custom. In the case of items which are not covered by specifications, measurements shall be taken in accordance with the relevant standard method of measurement issued by the Bureau of Indian Standards and if for any item no such standard is available then a mutually agreed method shall be followed.

The contractor shall give not less than seven days' notice to the Engineer-in-Charge or his authorized representative in charge of the work before covering up or otherwise placing beyond the reach of checking and/or test checking the measurement of any work in order that the same may be checked and/or test checked and correct dimensions thereof be taken before the same is covered up or placed beyond the reach of checking and/or test checking measurement and shall not cover up and place beyond reach of measurement any work without consent in writing of the Engineer-in-Charge or his authorized representative in charge of the work who shall within the aforesaid period of seven days inspect the work, and if any work shall be covered up or placed beyond the reach of checking and/or test checking measurements without such notice having been given or the Engineer-in-Charge's consent being obtained in writing the same shall be uncovered at the Contractor's expense, or in default thereof no payment or allowance shall be made for such work or the materials with which the same was executed.

Engineer-in-Charge or his authorized representative may cause either themselves or through another officer of the department to check the measurements recorded by contractor and all provisions stipulated herein above shall be applicable to such checking of measurements or levels.

It is also a term of this contract that checking and/or test checking the measurements of any item of work in the measurement book and/or its payment in the interim, on account of final bill shall not be considered as conclusive evidence as to the sufficiency of any work or material to which it relates nor shall it relieve the contractor from liabilities from any over measurement or defects noticed till completion of the defects liability period.

Clause 7

Payment on intermediate certificate to be regarded as Advances

No payment shall be made for work, estimated to cost Rs. Twenty lac or less till after the whole of the work shall have been completed and certificate of completion given. For works estimated to cost over Rs, Twenty lac the interim or running account bills shall be submitted by the contractor for the work executed on the basis of such recorded measurements on the format of the Department in triplicate on or before the date of every month fixed for the same by the Engineer-in-Charge. The contractor shall not be entitled to be paid any such interim payment if the gross work done together with net payment/ adjustment of advances for material collected, if any, since the last such payment is less than the amount specified in Schedule 'F', in which case the interim bill shall be prepared on the appointed date of the month after the requisite progress is achieved. Engineer-in-Charge shall arrange to have the bill verified by taking or causing to be taken, where necessary, the requisite measurements of the work. In the event of the failure of the contractor to submit the bills, no claims whatsoever due to delays on payment including that of interest shall be payable to the contractor. Payment on account of amount admissible shall be made by the Engineer-in-Charge certifying the sum to which the contractor is considered entitled by way

of interim payment at such rates as decided by the Engineer-in-Charge. The amount admissible shall be paid by 10th working day after the day of presentation of the bill by the Contractor to the Engineer-in-Charge or his Authorized Engineer together with the account of the material issued by the department, or dismantled materials, if any. In the case of works outside the headquarters of the Engineer- in-Charge, the period of ten working days will be extended to fifteen working days. In case of delay in payment of intermediate bills after 45 days of submission of bill by the contractor provided the bill submitted by the contractor found to be in order, a simple interest @ 5% (five percent) per annum shall be paid to the contractor from the date of expiry of prescribed time limit which will be compounded on yearly basis

All such interim payments shall be regarded as payment by way of advances against final payment only and shall not preclude the requiring of bad, unsound and imperfect or unskilled work to be rejected, removed, taken away and reconstructed or re-erected. Any certificate given by the Engineer-in-Charge relating to the work done or materials delivered forming part of such payment, may be modified or corrected by any subsequent such certificate(s) or by the final certificate and shall not by itself be conclusive evidence that any work or materials to which it relates is/are in accordance with the contract and specifications. Any such interim payment, or any part thereof shall not in any respect conclude, determine or affect in any way powers of the Engineer-in-Charge under the contract or any of such payments be treated as final settlement and adjustment of accounts or in any way vary or affect the contract.

Pending consideration of extension of date of completion, interim payments shall continue to be made as herein provided without prejudice to the right of the department to take action under the terms of this contract for delay in the completion of work, if the extension of date of completion is not granted by the competent authority.

The Engineer-in-Charge in his sole discretion on the basis of a certificate from the Asstt. Engineer to the effect that the work has been completed up to the level in question make interim advance payments without detailed measurements for work done (other than foundations, items to be covered under finishing items) up to lintel level (including sunshade etc.) and slab level, for each floor working out at 75% of the assessed value. The advance payments so allowed shall be adjusted in the subsequent interim bill(s) to be submitted by the contractor within 10 days of the interim payment. In case of delay in submission of bill by the contractor a simple interest @ 10% per annum shall be paid to the Government from the date of expiry of prescribed time limit which will be compounded on yearly basis.

Payments in composite Contracts

In case of composite tenders, running payment for the major component shall be made by EE of major discipline to the main contractor. Running payment for minor component shall be made by the Engineer-in-Charge of the discipline of minor component directly to the main contractor.

In case main contractor fails to make the payment to the contractor associated by him within 15 days of receipt of each running account payment, then on the written complaint of contractor associated for such minor component, Engineer in charge of minor component shall serve the show cause to the main contractor and if reply of main contractor either not received or found unsatisfactory, he may make the payment directly to the contractor associated for minor component as per the terms and conditions of the agreement drawn between main contractor and associate contractor fixed by him. Such payment made to the associate contractor shall be recovered by Engineer-in-charge of major or minor component from the next R/A/ final bill due to main contractor as the case may be.

Clause 7A

No Running Account Bill shall be paid for the work till the applicable labour licenses, registration with EPFO, ESIC and BOCW Welfare Board, whatever applicable are submitted by the contractor to the Engineer-in-Charge.

Clause 8

Completion Certificate and Completion Plans

Within ten days of the completion of the work, the contractor shall give notice of such completion to the Engineer-in-Charge and within thirty days of the receipt of such notice, the Engineer-in-Charge shall inspect the work and if there is no defect in the work, shall furnish the contractor with a final certificate of completion, otherwise a provisional certificate of

physical completion indicating defects (a) to be rectified by the contractor and/or (b) for which payment will be made at reduced rates, shall be issued. But no final certificate of completion shall be issued, nor shall the work be considered to be complete until the contractor shall have removed from the premises on which the work shall be executed all scaffolding, surplus materials, rubbish and all huts and sanitary arrangements required for his/their work people on the site in connection with the execution of the works as shall have been erected or constructed by the contractor(s) and cleaned off the dirt from all wood work, doors, windows, walls, floor or other parts of the building, in, upon, or about which the work is to be executed or of which he may have had possession for the purpose of the execution; thereof, and not until the work shall have been measured by the Engineer-in-Charge. If the contractor shall fail to comply with the requirements of this Clause as to removal of scaffolding, surplus materials and rubbish and all huts and sanitary arrangements as aforesaid and cleaning off dirt on or before the date fixed for the completion of work, the Engineer-in-Charge may at the expense of the contractor remove such scaffolding, surplus materials and rubbish etc., and dispose of the same as he thinks fit and clean off such dirt as aforesaid, and the contractor shall have no claim in respect of scaffolding or surplus materials as aforesaid except for any sum actually realized by the sale thereof.

Clause 8 A

Completion Plans to be Submitted by the Contractor

The contractor shall submit completion plans for Internal and External Civil, Electrical and Mechanical Services within thirty days of the completion of the work, provided that the service plans having been issued for execution by the Engineer-in-Charge, unless the contractor, by virtue of any other provision in the contract, is required to prepare such plans

In case, the contractor fails to submit the completion plan as aforesaid, he shall be liable to pay a sum of 0.1 % (zero point one percent) of accepted Tendered Value or limit prescribed in Schedule F whichever is more as may be fixed by the authority as mentioned in Schedule F and in this respect the decision of the that authority shall be final and binding on the contractor.

Clause 9

Payment of Final Bill

The final bill shall be submitted by the contractor in the same manner as specified in interim bills within three months of physical completion of the work or within one month of the date of the final certificate of completion furnished by the Engineer-in-Charge whichever is earlier. No further claims shall be made by the contractor after submission of the final bill and these shall be deemed to have been waived and extinguished. Payments of those items of the bill in respect of which there is no dispute and of items in dispute, for quantities and rates as approved by Engineer-in-Charge, will, as far as possible be made within the period specified here in under, the period being reckoned from the date of receipt of the bill by the Engineer-in- Charge or his authorized Asstt. Engineer, complete with account of materials issued by the Department and dismantled materials.

(a)	If the Tendered value of work is up to 1 Crore	:	2 months
(b)	If the Tendered value of work is more than Rs 1 Crore and upto Rs. 10 Crore	:	3 months
(c)	If the Tendered value of work exceeds Rs. 10 Crore	:	6 months

If the final bill is submitted by the contractor within the period specified above and payment of final bills is made by the deptt. after prescribed time limit , a simple interest @ 5 % per annum shall be paid to the contractor from the date of expiry of prescribed time limit which will be compounded on yearly basis, provided the final bill submitted by the contractor is found to be in order.

Clause 9A

Payment of Contractor's Bills to Banks

Payments due to the contractor may, if so desired by him, be made to his bank, registered financial, co-operative or thrift societies or recognized financial institutions instead of direct to him provided that the contractor furnishes to the Engineer-in-Charge (1) an authorization in the form of a legally valid document such as a power of attorney conferring authority on the bank; registered financial, co-operative or thrift societies or recognized financial institutions to receive payments and (2) his own acceptance of the correctness of the amount made out as being due to him by Government or his signature on the bill or other claim preferred against Government before settlement by the Engineer-in-Charge of the account or claim by payment to the bank, registered financial, co-operative or thrift societies or recognized financial institutions. While the receipt given by such banks; registered financial, co-operative or thrift societies or recognized financial institutions shall constitute a full and sufficient discharge for the payment, the contractor shall whenever possible present his bills duly receipted and discharged through his bank, registered financial, co operative or thrift societies or recognized financial institutions.

Nothing herein contained shall operate to create in favour of the bank; registered financial, co-operative or thrift societies or recognized financial institutions any rights or equities vis-a-vis the President of India.

Clause 10A

Materials to be provided by the Contractor

The contractor shall, at his own expense, provide all materials, required for the works other than those which are stipulated to be supplied by the Government.

The contractor shall, at his own expense and without delay; supply to the Engineer-in-Charge samples of materials to be used on the work and shall get these approved in advance. All such materials to be provided by the Contractor shall be in conformity with the specifications laid down or referred to in the contract. The contractor shall, if requested by the Engineer-in-Charge furnish proof, to the satisfaction of the Engineer-in-Charge that the materials so comply. The Engineer-in-Charge shall within thirty days of supply of samples or within such further period as he may require intimate to the Contractor in writing whether samples are approved by him or not. If samples are not approved, the Contractor shall forthwith arrange to supply to the Engineer-in-Charge for his approval, fresh samples complying with the specifications laid down in the contract. When materials are required to be tested in accordance with specifications, approval of the Engineer-in-Charge shall be issued after the test results are received.

The Contractor shall at his risk and cost submit the samples of materials to be tested or analyzed and shall not make use of or incorporate in the work any materials represented by the samples until the required tests or analysis have been made and materials finally accepted by the Engineer-in-Charge. The Contractor shall not be eligible for any claim or compensation either arising out of any delay in the work or due to any corrective measures required to be taken on account of and as a result of testing of materials.

The contractor shall, at his risk and cost, make all arrangements and shall provide all facilities as the Engineer-in-Charge may require for collecting, and preparing the required number of samples for such tests at such time and to such place or places as may be directed by the Engineer-in-Charge and bear all charges and cost of testing unless specifically provided for otherwise elsewhere in the contract or specifications. The Engineer -in- Charge or his authorized representative shall at all times have access to the works and to all workshops and places where work is being prepared or from where materials, manufactured articles or machinery are being obtained for the works and the contractor shall afford every facility and every assistance in obtaining the right to such access.

The Engineer-in-Charge shall have full powers to require the removal from the premises of all materials which in his opinion are not in accordance with the specifications and in case of default, the Engineer-in-Charge shall be at liberty to employ at the expense of the contractor, other persons to remove the same without being answerable or accountable for any loss or damage that may happen or arise to such materials. The Engineer-in-Charge shall also have full powers to require other proper materials to be substituted thereof and in case of default, the Engineer-in-Charge may cause the same to be supplied and all costs which may attend such removal and substitution shall be borne by the Contractor.

The contractor shall at his own expense, provide a material testing lab at the site for conducting routine field tests. The lab shall be equipped at least with the testing equipment as specified in schedule F.

Clause 10B

Secured Advance on Materials

(i) The contractor, on signing an indenture in the form to be specified by the Engineer-in-Charge, shall be entitled to be paid during the progress of the execution of the work up to 75% of the assessed value of any materials or an amount not exceeding 75% of the material element cost in the tendered rate of the finished item of the work, whichever is lower ,which are in the opinion of the Engineer-in- Charge non-perishable, non-fragile and non-combustible and are in accordance with the contract and which have been brought on the site in connection therewith and are adequately stored and/or protected against damage by weather or other causes but which have not at the time of advance been incorporated in the works. When materials on account of which an advance has been made under this sub-clause are incorporated in the work, the amount of such advance shall be recovered/deducted from the next payment made under any of the clause or clauses of this contract.

Such secured advance shall also be payable on other items of perishable nature, fragile and combustible with the approval of the Engineer-in-Charge provided the contractor provides a comprehensive insurance cover for the full cost of such materials. The decision of the Engineer- in-Charge shall be final and binding on the contractor in this matter. No secured advance, shall however, be paid on high-risk materials such as ordinary glass, sand, petrol, diesel etc.

Mobilization advance

(ii) Mobilization advance not exceeding 10% of the tendered value may be given, if requested by the contractor in writing within one month of the order to commence the work. Such advance shall be in two or more installments to be determined by the Engineer-in- Charge at his sole discretion. The first installment of such advance shall be released by the Engineer-in-charge to the contractor on a request made by the contractor to the Engineer-in-Charge in this behalf. The second and subsequent installments shall be released by the Engineer-in- Charge only after the contractor furnishes a proof of the satisfactory utilization of the earlier installment to the entire satisfaction of the Engineer-in-Charge.

Before any installment of advance is released, the contractor shall execute a Bank Guarantee Bonds not more than 6 in number from Scheduled Bank for the amount equal to 110% of the amount of advance and valid for the period till recovery of advance. This (Bank Guarantee from Scheduled Bank for the amount equal to 110% of the balance amount of advance) shall be kept renewed from time to time to cover the balance amount and likely period of complete recovery.

Interest & Recovery

(iii) The mobilization advance in (ii) above bear simple interest at the rate of 10 percent per annum and shall be calculated from the date of payment to the date of recovery, both

days inclusive, on the outstanding amount of advance. Recovery of such sums advanced shall be made by the deduction from the contractors bills commencing after first ten percent of the gross value of the work is executed and paid, on pro-rata percentage basis to the gross value of the work billed beyond 10% in such a way that the entire advance is recovered by the time eighty percent of the gross value of the contract is executed and paid, together with interest due on the entire outstanding amount up to the date of recovery of the installment.

(iv) If the circumstances are considered reasonable by the Engineer-in-Charge, the period mentioned in (ii) and (iii) for request by the contractor in writing for grant of mobilization advance may be extended at the discretion of the Engineer-in-Charge.

Clause 10C

Payment on Account of Increase in Prices/ Wages due to Statutory Order(s)

If after submission of tender, if the price of any material incorporated in the work (excluding the material covered under clause 10 CA and/ or wages of labour increases as a direct result of the coming into force of any fresh law or statutory rule or order (but not due to any variation of rate in GST applicable on such material(s) being considered under this clause) beyond the prices/wages prevailing at the time of the last stipulated date of receipt of tenders including extensions, if any, for the work during contract period including the justified period extended under the provisions of clause 5 of the contract without any action under clause 2, then the amount of the contract shall accordingly be varied.

If after submission of the tender, the price of any material incorporated in the works (excluding the materials covered under Clause 10CA and/or wages of labour as prevailing at the time of last stipulated date of receipt of tender including extensions, if any, is decreased as a direct result of the coming into force of any fresh law or statutory rules or order (but not due to any variation of rate in GST applicable on such material (s) being considered under this clause), Government shall in respect of materials incorporated in the works (excluding the materials covered under Clause 10CA and/or labour engaged on the execution of the work after the date of coming into force of such law, statutory rule or order be entitled to deduct from the dues of the contractor, such amount as shall be equivalent to the difference between the prices of the materials and/or wages as prevailed at the time of the last stipulated date for receipt of tenders including extensions if any for the work and the prices of materials and/or wages of labour on the coming into force of such law, statutory rule or order. This will be applicable for the contract period including the justified period extended under the provisions of clause 5 of the contract without any action under clause 2.

Engineer-in-Charge shall call books of account and other relevant documents from the contractor to satisfy himself about reasonability of increase in prices of materials and wages.

The contractor shall, within a reasonable time of his becoming aware of any alteration in the price of any such materials and/or wages of labour, give notice thereof to the Engineer-in-Charge stating that the same is given pursuant to this condition together with all information relating thereto which he may be in position to supply.

For this purpose, the labour component of 85% of the value of the work executed during period under consideration shall not exceed the percentage as specified in Schedule F, and the increase/decrease in labour shall be considered on the minimum daily wages in rupees of any unskilled Mazdoor, fixed under any law statutory role and order. The cost of work for which escalation is applicable (W) is same as cost of work done worked out as indicated in sub-para (ii) of clause 10 CC except the amount of full assessed value of secured Advance.

Clause 10CA

Payment due to variation in prices of materials after receipt of tender

If after submission of the tender, the price of materials specified in Schedule F increases/ decreases beyond the base price(s) as indicated in Schedule F for the work, then the amount of the contract shall accordingly be varied and provided further that any such variations shall be effected for stipulated period of Contract including the justified period extended under the provisions of Clause 5 of the Contract without any action under Clause 2.

However for work done/during the justified period extended as above, it will be limited to indices prevailing at the time of updated stipulated date of completion considering the effect of extra work (extra time to be calculated on pro-rata basis only as cost of extra work x stipulated period/tendered cost).If updated stipulated date of completion as calculated on pro- rata basis does not cover full calendar month then indices will be considered or restricted to previous month.

The increase/decrease in prices of cement, steel reinforcement, structural steel and POL shall be determined by the Price indices issued by the Director General, CPWD. For other items provided in the Schedule 'F', this shall be determined by the All India Wholesale Price Indices of materials as published by Economic Advisor to Government of India, Ministry of Commerce and Industry. Base price for cement, steel reinforcement, structural steel and POL shall be as issued under the authority of Director General CPWD applicable for Delhi including Noida, Gurgaon, Faridabad & Ghaziabad and for other places as issued under the authority of Zonal Chief Engineer, CPWD and base price of other materials issued by concerned Zonal Chief Engineer and as indicated in Schedule 'F'. In case, price index of a particular material is not issued by Ministry of Commerce and Industry, then the price index of nearest similar material as indicated in Schedule 'F' shall be followed.

The amount of the contract shall accordingly be varied for all such materials and will be worked out as per the formula given below for individual material:-

Adjustment for component of individual material

$$V = P \times Q \times \frac{CI - CI_O}{CI_O}$$

where,

V = Variation in material cost i.e. increase or decrease in the amount of rupees to be paid or recovered.

P = Base Price of material as issued under authority of DG, CPWD or concerned Zonal Chief Engineer and as indicated in Schedule "F". For Projects and Original Works

Q = Quantity of material brought at site for bonafide use in the works since previous bill excluding any such quantity consumed in the deviated quantity of items beyond deviation limit and extra /substituted item, paid/to be paid at rates derived on the basis of market rate under clause 12.2.

Clo = Price index for cement, steel reinforcement bars structural steel and POL as issued by the DG, CPWD and corresponding to the time of base price of respective material indicated in Schedule 'F'. For other items, if any, provided in Schedule 'F', All India Wholesale Price Index for the material as published by the Economic Advisor to Government of India, Ministry of Industry and Commerce and corresponding to the time of base price of respective material indicated in Schedule 'F'.

Cl = Price index for cement, steel reinforcement bars, structural steel and POL as issued under the authority of DG, CPWD for period under consideration. For other items, if any, provided in Schedule 'F', All India Wholesale Price Index for the material for period under consideration as published by Economic Advisor to Government of India, Ministry of Industry and Commerce.

Note: (i) In respect of the justified period extended under the provisions of clause 5 of the contract without any action under clause 2, the index prevailing at the time of updated stipulated date of completion considering the effect of extra work (extra time to be calculated on pro-rata basis only as cost of extra work x stipulated period/ tendered cost) shall be considered.

Provided always that provisions of the preceding Clause 10 C shall not be applicable in respect of Materials covered in this Clause. If updated stipulated date of completion as calculated on pro- rata basis does not cover full calendar month then indices will be considered or restricted to previous month.

(ii) If during progress of work or at the time of completion of work, it is noticed that any material brought at site is in excess of requirement, then amount of escalation if paid earlier on such excess quantity of material shall be recovered on the basis of cost indices as applied at the time of payment of escalation or as prevailing at the time of effecting recovery, whichever is higher.

(iii) Cement mentioned wherever in this clause also includes Cement component used in RMC brought at site from outside approved RMC plants, if any.

(iv) The date wise record of ready mix concrete shall be kept in a register and the cement consumption for the same shall be calculated accordingly.

(v) If built-up steel items are brought at site from workshop, then the variation shall be paid for the structural steel up to the period when the built up item/finished product is brought at site.

Clause 10CC

Payment due to Increase / Decrease in Prices/ Wages (excluding materials covered under clause 10 CA) after Receipt of Tender for Works

If the prices of materials (not being materials supplied or services rendered at fixed prices by the department in accordance with clause 10 & 34 thereof) and/or wages of labour required for execution of the work increase, the contractor shall be compensated for such increase as per provisions detailed below and the amount of the contract shall accordingly be varied, subject to the condition that such compensation for escalation in prices and wages shall be available only for the work done during the stipulated period of the contract including the justified period extended under the provisions of clause 5 of the contract without any action under clause 2. No such compensation shall be payable for a work for which the stipulated period of completion is equal to or less than the time as specified in Schedule F. Such compensation for escalation in the prices of materials and labour, when due, shall be worked out based on the following provisions:-

(i) The base date for working out such escalation shall be the last stipulated date of receipt of tenders including extension, if any.

(ii) The cost of work on which escalation will be payable shall be reckoned as below :

(a) Gross value of work done up to this quarter : (A)

(b) Gross value of work done up to the last quarter : (B)

(c) Gross value of work done since previous quarter (A-B) (C)

(d) Full assessed value of Secured Advance (excluding materials Covered under Clause 10 CA) fresh paid in this quarter : (D)

(e) Full assessed value of Secured Advance (excluding materials Covered under Clause 10 CA) recovered in this quarter : (E)

(f) Full assessed value of Secured Advance for which escalation Payable in this quarter (D-E): (F)

(g) Advance payment made during this quarter: (G)

(h) Advance payment recovered during this quarter: (H)

(i) Advance payment for which escalation is payable in this Quarter(G-H): (I)

(j) Extra items/deviated quantities of items paid as per Clause 12 Based on prevailing market rates during this quarter: (J)

Then, M = C+F+I-J

N = 0.85 M

Cost of work for which escalation is applicable:

W = N

(iii) Components for materials (except cement, reinforcement bars, structural steel, POL or other materials covered under clause 10 CA) labour, etc. shall be pre-determined for every work and incorporated in the conditions of contract attached to the tender papers included in Schedule 'F'. The decision of the Engineer-in-Charge in working out such percentage shall be binding on the contractors.

(iv) The compensation for escalation for other materials (excluding cement, reinforcement bars, structural steel, POL or other materials covered under clause 10 CA) shall be worked as per the formula given below:-

Adjustment for civil component (except cement, structural steel, reinforcement bars, POL and other materials covered under clause 10CA) / electrical component of construction 'Materials'

$$Vm = W \times \frac{Xm}{100} \times \frac{MI-MI_O}{MI_O}$$

Vm = Variation in material cost i.e. increase or decrease in the amount in rupees to be paid or recovered.

W = Cost of Work done worked out as indicated in sub-para (ii) of Clause 10CC.

Xm = Component of 'materials' (except cement, structural steel, reinforcement bars POL and other materials covered under clause10CA) expressed as percent of the total value of work.

MI = All India Wholesale Price Index for civil component/electrical component* of construction material as worked out on the basis of All India Wholesale Price Index for Individual Commodities/ Group Items for the period under consideration as published by Economic Advisor to Govt. of India, Ministry of Industry & Commerce and applying weightages to the Individual Commodities/Group Items. (In respect of the justified period extended under the provisions of clause 5 of the contract without any action under clause 2, the index prevailing at the time of updated stipulated date of completion considering the effect of extra work (extra time to be calculated on prorata basis only as cost of extra

work x stipulated period/tendered cost, shall be considered.) If updated stipulated date of completion as calculated on pro- rata basis does not cover full calendar month then indices will be considered or restricted to previous month.

Mlo = All India Wholesale Price Index for civil component/electrical component* of construction material as worked out on the basis of All India Wholesale Price Index for Individual Commodities/Group Items valid on the last stipulated date of receipt of tender including extension, if any, as published by the Economic Advisor to Govt. of India, Ministry of Industry & Commerce and applying weightages to the Individual Commodities/Group items.

*Note: relevant component only will be applicable.

(v) The following principles shall be followed while working out the indices mentioned in para (iv) above.

(a) The compensation for escalation shall be worked out at quarterly intervals and shall be with respect to the cost of work done as per bills paid during the three calendar months of the said quarter. The dates of preparation of bills as finally entered in the Measurement Book by the Assistant Engineer/ date of submission of bill finally by the contractor to the department in case of computerized measurement books shall be the guiding factor to decide the bills relevant to the quarterly interval. The first such payment shall be made at the end of three months after the month (excluding the month in which tender was accepted) and thereafter at three months' interval. At the time of completion of the work, the last period for payment might become less than 3 months, depending on the actual date of completion.

(b) The index (MI/FI etc.) relevant to any quarter/period for which such compensation is paid shall be the arithmetical average of the indices relevant to the three calendar months. If the period up to date of completion after the quarter covered by the last such installment of payment, is less than three months, the index MI and FI shall be the average of the indices for the months falling within that period.

(vi) The compensation for escalation for labour shall be worked out as per the formula given below:-

$$VL = W \times \frac{Y}{100} \times \frac{LI - LI0}{LI0}$$

VL : Variation in labour cost i.e. amount of increase or decrease in rupees to be paid or recovered.

W : Value of work done, worked out as indicated in sub-para (ii) above.

Y : Component of labour expressed as a percentage of the total value of the work.

LI : Minimum wage in rupees of an unskilled adult male mazdoor, fixed under any law, statutory rule or order as applicable on the last date of the quarter previous to the one under consideration. (In respect of the justified period

extended under the provisions of clause 5 of the contract without any action under clause 2, the minimum wage prevailing on the last date of quarter previous to the quarter pertaining to updated stipulated date of Completion considering the effect of extra work (extra time to be calculated on prorata basis only as cost of extra work x stipulated period/tendered cost, shall be considered.) If updated stipulated date of completion as calculated on pro-rata basis does not cover full calendar month then indices will be considered or restricted to previous month.

LI_O : Minimum daily wage in rupees of an unskilled adult male mazdoor, fixed under any law, statutory rule or order as on the last stipulated date of receipt of tender including extension, if any.

(vii) The following principles will be followed while working out the compensation as per sub para (vi) above.

(a) The minimum wage of an unskilled Mazdoor mentioned in sub-para (vi) above shall be the higher of the wage notified by Government of India, Ministry of Labour and that notified by the local administration both relevant to the place of work and the period of reckoning.

(b) The escalation for labour also shall be paid at the same quarterly intervals when escalation due to increase in cost of materials is paid under this clause. If such revision of minimum wages takes place during any such quarterly intervals, the escalation compensation shall be payable at revised rates only for work done in subsequent quarters;

(c) Irrespective of variations in minimum wages of any category of labour, for the purpose of this clause, the variation in the rate for an unskilled Mazdoor alone shall form the basis for working out the escalation compensation payable on the labour component.

(viii) In the event the price of materials and/or wages of labour required for execution of the work decrease/s, there shall be a downward adjustment of the cost of work so that such price of materials and/or wages of labour shall be deductible from the cost of work under this contract and in this regard the formula herein before stated under this Clause 10CC shall mutatis mutandis apply, provided that:

(a) no such adjustment for the decrease in the price of materials and/or wages of labour aforementioned would be made in case of contracts in which the stipulated period of completion of the work is equal to or less than the time as specified in Schedule 'F'.

(b) the Engineer-in-Charge shall otherwise be entitled to lay down the procedure by which the provision of this sub-clause shall be implemented from time to time and the decision of the Engineer-in-Charge in this behalf shall be final and binding on the contractor.

(ix) Provided always that:-

(a) Where provisions of clause 10CC are applicable, provisions of clause 10C will not be applicable but provisions of clause 10CA will be applicable.

(b) Where provisions of clause 10CC are not applicable, provisions of clause 10C and 10CA will become applicable.

Note: Updated stipulated date of completion (period of completion plus extra time for extra work) for compensation under clause 10C, 10CA and 10 CC

The factor of 1.25 taken into account for calculating the extra time under clause 12.1 for extra time shall not be considered while calculating the updated stipulated date of completion for this purpose in clause 10C, clause 10CA, and clause 10CC.

Clause 10 D

Dismantled Material Govt. Property

The contractor shall treat all materials obtained during dismantling of a structure, excavation of the site for a work, etc. as Government's property and such materials shall be disposed off to the best advantage of Government according to the instructions in writing issued by the Engineer-in-Charge

Clause 11

Work to be Executed in Accordance with Specifications, Drawings, Orders etc.

The contractor shall execute the whole and every part of the work in the most substantial and workmanlike manner both as regards materials and otherwise in every respect in strict accordance with the specifications. The contractor shall also conform exactly, fully and faithfully to the design, drawings and instructions in writing in respect of the work signed by the Engineer-in-Charge and the contractor shall be furnished free of charge one copy of the contract documents together with specifications, designs, drawings and instructions as are not included in the standard specifications of Central Public Works Department specified in Schedule 'F' or in any Bureau of Indian Standard or any other, published standard or code or, Schedule of Rates or any other printed publication referred to elsewhere in the contract.

The contractor shall comply with the provisions of the contract and with the care and diligence execute and maintain the works and provide all labour and materials, tools and plants including for measurements and supervision of all works, structural plans and other things of temporary or permanent nature required for such execution and maintenance in so far as the necessity for providing these, is specified or is reasonably inferred from the contract. The Contractor shall take full responsibility for adequacy, suitability and safety of all the works and methods of construction.

Clause 12

Deviations/ Variations Extent and Pricing

The Engineer-in-Charge shall have power (i) to make alteration in, omissions from, additions to, or substitutions for the original specifications, drawings, designs and instructions that may appear to him to be necessary or advisable during the progress of the work, and (ii) to omit a part of the works in case of non-availability of a portion of the site or for any other reasons and the contractor shall be bound to carry out the works in accordance with any instructions given to him in writing signed by the Engineer-in-Charge and such alterations, omissions, additions or substitutions shall form part of the contract as if originally provided therein and any altered, additional or substituted work which the contractor may be directed to do in the manner specified above as part of the works, shall be carried out by the contractor on the same conditions in all respects including price on which he agreed to do the main work except as hereafter provided.

12.1 The time for completion of the works shall, in the event of any deviations resulting in additional cost over the tendered value sum being ordered, be extended, if requested by the contractor, as follows :

(i) In the proportion which the additional cost of the altered, additional or substituted work, bears to the original tendered value plus

(ii) 25% of the time calculated in (i) above or such further additional time as may be considered reasonable by the Engineer-in-Charge.

Deviation, Extra Items and Pricing

12.2 In the case of extra item(s) (items that are completely new, and are in addition to the items contained in the contract), the contractor may within fifteen days of receipt of order or occurrence of the item(s) submit market rate claim rates, supported by proper analysis which shall include invoices, vouchers etc. and Manufacturer's specification for the work failing which the rate approved later by the Engineer- in-charge shall be binding and the Engineer-in-Charge shall within prescribed time limit of the receipt of the claims supported by analysis , after giving consideration to the analysis of the rates submitted by the contractor, determine the rates on the basis of the market rates and the contractor shall be paid in accordance with the rates so determined, failing which it will be deemed to have been approved.

In the case of substituted items (items that are taken up with partial substitution or in lieu of items of work in the contract), the rate for the agreement item (to be substituted) and substituted item shall also be determined in the manner as mentioned in the following para.

(a) If the market rate for the substituted item so determined is more than the market rate of the agreement item (to be substituted), the rate payable to the contractor for the substituted item shall be the rate for the agreement item (to be substituted) so increased to the extent of the difference between the market rates of substituted item and the agreement item (to be substituted).

(b) If the market rate for the substituted item so determined is less than the market rate of the agreement item (to be substituted), the rate payable to the contractor for the substituted item shall be the rate for the agreement item (to be substituted) so decreased to the extent of the difference between the market rates of substituted item and the agreement item (to be substituted).

Deviation, deviated Quantities, Pricing

In the case of contract items, substituted items, contract cum substituted items, which exceed the limits laid down in schedule F, the contractor may within fifteen days of receipt of order or occurrence of the excess, claim revision of the rates, supported by proper analysis for the work in excess of the above mentioned limits, provided that if the rates so claimed are in excess of the rates specified in the schedule of quantities, the Engineer-in-Charge shall within prescribed time limit of receipt of the claims supported by analysis, after giving consideration to the analysis of the rates submitted by the contractor, determine the rates on the basis of the market rates (as per invoice, vouchers from the manufacturers or suppliers submitted by the agency and duly verified by Engineer in Charge or his representative) and the contractor shall be paid in accordance with the rates so determined.

The prescribed time limit for finalizing rates for Extra Item(s), Substitute Item(s) and Deviated Quantities of contract items is within 45 days after submission of proposal by the contractor without observation of the Engineer-in-Charge.

12.3 The provisions of the preceding paragraph shall also apply to the decrease in the rates of items for the work in excess of the limits laid down in Schedule F, and the Engineer-in-Charge shall after giving notice to the contractor within one month of occurrence of the excess and after taking into consideration any reply received from him within fifteen days of the receipt of the notice, revise the rates for the work in question within one month of the expiry of the said period of fifteen days having regard to the market rates.

12.4 For the purpose of operation of Schedule "F", the following works shall be treated as works relating to foundation unless & otherwise defined in the contract:

(i) For Buildings : All works up to 1.2 metres above ground level or up to floor 1 level whichever is lower.

(ii) For abutments, piers and well staining : All works up to 1.2 m above the bed level.

(iii) For retaining walls, wing walls, compound walls, chimneys, over head reservoirs/ tanks and other elevated structures : All works up to 1.2 metres above the ground level.

(iv) For reservoirs/tanks (other than overhead reservoirs/tanks) : All works up to 1.2 metres above the ground level.

(v) For basement: All works up to 1.2 m above ground level or up to floor 1 level whichever is lower.

(vi) For Roads, all items of excavation and filling including treatment of sub base.

12.5 Any operation incidental to or necessarily has to be in contemplation of tenderer while quoting tender, or necessary for proper execution of the item included in the Schedule of quantities or in the schedule of rates mentioned above, whether or not, specifically indicated in the description of the item and the relevant specifications, shall be deemed to be included in the rates quoted by the tenderer or the rate given in the said schedule of rates, as the case may be. Nothing extra shall be admissible for such operations.

Clause 13

Foreclosure of contract due to Abandonment or Reduction in Scope of Work

If at any time after acceptance of the tender or during the progress of work, the purpose or object for which the work is being done changes due to any supervening cause and as a result of which the work has to be abandoned or reduced in scope the Engineer-in-Charge shall give notice in writing to that effect to the contractor stating the decision as well as the cause for such decision and the contractor shall act accordingly in the matter. The contractor shall have no claim to any payment of compensation or otherwise whatsoever, on account of any profit or advantage which he might have derived from the execution of the works in full but which he did not derive in consequence of the foreclosure of the whole or part of the works.

The contractor shall be paid at contract rates, full amount for works executed at site and, in addition, a reasonable amount as certified by the Engineer-in-Charge for the items hereunder mentioned which could not be utilized on the work to the full extent in view of the foreclosure;

(i) Any expenditure incurred on preliminary site work, e.g. temporary access roads, temporary labour huts, staff quarters and site office; storage accommodation and water storage tanks.

(ii) Government shall have the option to take over contractor's materials or any part thereof either brought to site or of which the contractor is legally bound to accept delivery from suppliers (for incorporation in or incidental to the work) provided, however Government shall be bound to take over the materials or such portions thereof as the contractor does not desire to retain. For materials taken over or to be taken over by Government, cost of such materials as detailed by Engineer-in- Charge shall be paid. The cost shall, however, take into account purchase price, cost of transportation and deterioration or damage which may have been caused to materials whilst in the custody of the contractor.

(iii) Reasonable compensation for transfer of T & P from site to contractor's permanent stores or to his other works, whichever is less. If T & P are not transported to either of the said places, no cost of transportation shall be payable.

(iv) Reasonable compensation for repatriation of contractor's site staff and imported labour to the extent necessary.

The contractor shall, if required by the Engineer- in-Charge, furnish to him, books of account, wage books, time sheets and other relevant documents and evidence as may be necessary to enable him to certify the reasonable amount payable under this condition.

The reasonable amount of items on (i), (iii) and (iv) above shall not be in excess of 2% of the cost of the work remaining incomplete on the date of closure, i.e. total stipulated cost of the work as per accepted tender less the cost of work actually executed under the contract and less the cost of contractor's materials at site taken over by the Government as per item (ii) above. Provided always that against any payments due to the contractor on this account or otherwise, the Engineer-in-Charge shall be entitled to recover or be credited with any outstanding balances due from the contractor for advance paid in respect of any tool, plants and materials and any other sums which at the date of termination were recoverable by the Government from the contractor under the terms of the contract.

In the event of action being taken under Clause 13 to reduce the scope of work, the contractor may furnish fresh Performance Guarantee on the same conditions, in the same manner and at the same rate for the balance tendered amount and initially valid up to the extended date of completion or stipulated date of completion if no extension has been granted plus minimum 60 days beyond that. Wherever such a fresh Performance Guarantee is furnished by the contractor the Engineer-in-Charge may return the previous Performance Guarantee.

Clause 14

Carrying out part work at risk & cost of Contractor

If contractor:

(i) At any time makes default during currency of work or does not execute any part of the work with due diligence and continues to do so even after a notice in writing of 7 working days in this respect from the Engineer-in-Charge; or

(ii) Commits default in complying with any of the terms and conditions of the contract and does not remedy it or takes effective steps to remedy it within 7 working days even after a notice in writing is given in that behalf by the Engineer-in-Charge; or

Fails to complete the work(s) or items of work with individual dates of completion, on or before the date(s) so determined, and does not complete them within the period specified in the notice given in writing in that behalf by the Engineer-in-Charge.

(iii) The Engineer- in-Charge without invoking action under clause 3 may, without prejudice to any other right or remedy against the contractor which have either accrued or accrue thereafter to Government, by a notice in writing to take the part work / part incomplete work of any item(s) out of his hands and shall have powers to :

(a) Take possession of the site and any materials, constructional plant, implements, stores, etc., thereon; and/or

(b) Carry out the part work / part incomplete work of any item(s) by any means at the risk and cost of the contractor.

The Engineer-in-Charge shall determine the amount, if any, is recoverable from the contractor for completion of the part work/ part incomplete work of any item(s) taken out of his hands and execute at the risk and cost of the contractor, the liability of contractor on account of

loss or damage suffered by Government because of action under this clause shall not exceed 10% of the tendered value of the work.

In determining the amount, credit shall be given to the contractor with the value of work done in all respect in the same manner and at the same rate as if it had been carried out by the original contractor under the terms of his contract, the value of contractor's materials taken over and incorporated in the work and use of plant and machinery belonging to the contractor.

The certificate of the Engineer-in-Charge as to the value of work done shall be final and conclusive against the contractor provided always that action under this clause shall only be taken after giving notice in writing to the contractor. Provided also that if the expenses incurred by the department are less than the amount payable to the contractor at his agreement rates, the difference shall not be payable to the contractor.

Any excess expenditure incurred or to be incurred by Government in completing the part work/ part incomplete work of any item(s) or the excess loss of damages suffered or may be suffered by Government as aforesaid after allowing such credit shall without prejudice to any other right or remedy available to Government in law or per as agreement be recovered from any money due to the contractor on any account, and if such money is insufficient, the contractor shall be called upon in writing and shall be liable to pay the same within 30 days.

If the contractor fails to pay the required sum within the aforesaid period of 30 days, the Engineer-in-Charge shall have the right to sell any or all of the contractors' unused materials, constructional plant, implements, temporary building at site etc. and adjust the proceeds of sale thereof towards the dues recoverable from the contractor under the contract and if thereafter there remains any balance outstanding, it shall be recovered in accordance with the provisions of the contract.

In the event of above course being adopted by the Engineer-in-Charge, the contractor shall have no claim to compensation for any loss sustained by him by reason of his having purchased or procured any materials or entered into any engagements or made any advance on any account or with a view to the execution of the work or the performance of the contract.

Clause 15

Suspension of Work

(i) The contractor shall, on receipt of the order in writing of the Engineer-in-Charge, (whose decision shall be final and binding on the contractor) suspend the progress of the works or any part thereof for such time and in such manner as the Engineer-in-Charge may consider necessary so as not to cause any damage or injury to the work already done or endanger the safety thereof for any of the following reasons:

(a) on account of any default on the part of the contractor or;

(b) for proper execution of the works or part thereof for reasons other than the default of the contractor; or

(c) for safety of the works or part thereof.

The contractor shall, during such suspension, properly protect and secure the works to the extent necessary and carry out the instructions given in that behalf by the Engineer in- Charge.

(ii) If the suspension is ordered for reasons (b) and (c) in sub-para (i) above:

(a) the contractor shall be entitled to an extension of time equal to the period of every such suspension PLUS 25%, for completion of the item or group of items of work for which a separate period of completion is specified in the contract and of which the suspended work forms a part, and;

(b) If the total period of all such suspensions in respect of an item or group of items or work for which a separate period of completion is specified in the contract exceeds thirty days, the contractor shall, in addition, be entitled to such compensation as the Engineer-in- Charge may consider reasonable in respect of salaries and/or wages paid by the contractor to his employees and labour at site, remaining idle during the period of suspension, adding thereto 2% to cover indirect expenses of the contractor provided the contractor submits his claim supported by details to the Engineer-in- Charge within fifteen days of the expiry of the period of 30 days.

(iii) If the works or part thereof is suspended on the orders of the Engineer-in-Charge for more than three months at a time, except when suspension is ordered for reason (a) in sub para (i) above, the contractor may after receipt of such order serve a written notice on the Engineer-in-Charge requiring permission within fifteen days from receipt by the Engineer in- Charge of the said notice, to proceed with the work or part thereof in regard to which progress has been suspended and if such permission is not granted within that time, the contractor, if he intends to treat the suspension, where it affects only a part of the works as an omission of such part by Government or where it affects whole of the works, as an abandonment of the works by Government, shall within ten days of expiry of such period of 15 days give notice in writing of his intention to the Engineer-in-Charge. In the event of the contractor treating the suspension as an abandonment of the contract by Government, he shall have no claim to payment of any compensation on account of any profit or advantage which he might have derived from the execution of the work in full but which he could not derive in consequence of the abandonment. He shall, however, be entitled to such compensation, as the Engineer-in-Charge may consider reasonable, in respect of salaries and/or wages paid by him to his employees and labour at site, remaining idle in consequence adding to the total thereof 2% to cover indirect expenses of the contractor provided the contractor submits his claim supported by details to the Engineer-in-Charge within 30 days of the expiry of the period of 3 months .

Clause 16

Action in case Work not done as per Specifications

All works under or in course of execution or executed in pursuance of the contract, shall at all times be open and accessible to the inspection and supervision of the Engineer-in - charge, his authorized subordinates in charge of the work and all the superior officers, officer of the Quality Assurance Unit of the Department or any organization engaged by the Department for Quality Assurance and of the Chief Technical Examiner's Office, and the contractor shall, at all times, during the usual working hours and at all other times at which reasonable notice of the visit of such officers has been given to the contractor, either himself be present to receive orders and instructions or have a responsible agent duly accredited in writing, present for that purpose. Orders given to the Contractor's agent shall be considered to have the same force as if they had been given to the contractor himself.

If it shall appear to the Engineer-in-charge or his authorized subordinates in charge of the work or to the Chief Engineer in charge of Quality Assurance or his subordinate officers or the officers of the organization engaged by the Department for Quality Assurance or to the Chief Technical Examiner or his subordinate officers, that any work has been executed with unsound, imperfect, or unskillful workmanship, or with materials or articles provided by him for the execution of the work which are unsound or of a quality inferior to that contracted or otherwise not in accordance with the contract, the contractor shall, on demand in writing which shall be made within twelve months (six months in the case of work costing Rs. 10 Lac and below except road work) of the completion of the work from the Engineer-in-Charge

specifying the work, materials or articles complained of notwithstanding that the same may have been passed, certified and paid for forthwith rectify, or remove and reconstruct the work so specified in whole or in part, as the case may require or as the case may be, remove the materials or articles so specified and provide other proper and suitable materials or articles at his own charge and cost. In the event of the failing to do so within a period specified by the Engineer-in- Charge in his demand aforesaid, then the contractor shall be liable to pay compensation at the same rate as under clause 2 of the contract (for non-completion of the work in time) for this default.

In such case the Engineer-in-Charge may not accept the item of work at the rates applicable under the contract but may accept such items at reduced rates as the authority specified in schedule 'F' may consider reasonable during the preparation of on account bills or final bill if the item is so acceptable without detriment to the safety and utility of the item and the structure or he may reject the work outright without any payment and/or get it and other connected and incidental items rectified, or removed and re-executed at the risk and cost of the contractor. Decision of the Engineer-in-Charge to be conveyed in writing in respect of the same will be final and binding on the contractor.

Clause 17

Contractor Liable for Damages, defects during defect liability Period

If the contractor or his working people or servants shall break, deface, injure or destroy any part of building in which they may be working, or any building, road, road kerb, fence, enclosure, water pipe, cables, drains, electric or telephone post or wires, trees, grass or grassland, or cultivated ground contiguous to the premises on which the work or any part is being executed, or if any damage shall happen to the work while in progress, from any cause whatever or if any defect, shrinkage or other faults appear in the work within twelve months (six months in the case of work costing Rs. Ten lacs and below except road work) after a certificate final or otherwise of its completion shall have been given by the Engineer in- Charge as aforesaid arising out of defect or improper materials or workmanship the contractor shall upon receipt of a notice in writing on that behalf make the same good at his own expense or in default the Engineer-in-Charge cause the same to be made good by other workmen and deduct the expense from any sums that may be due or at any time thereafter may become due to the contractor, or from his security deposit or the proceeds of sale thereof or of a sufficient portion thereof. The security deposit of the contractor shall not be refunded before the expiry of twelve months (six months in the case of work costing Rs. Ten lakhs and below except road work) after the issue of the certificate final or otherwise, of completion of work, or till the final bill has been prepared and passed whichever is later. Provided that in the case of road work, if in the opinion of the Engineer-in-Charge, half of the security deposit is sufficient, to meet all liabilities of the contractor under this contract, half of the security deposit will be refundable after six months and the remaining half after twelve months of the issue of the said certificate of completion or till the final bill has been prepared and passed whichever is later.

In case of Maintenance and Operation works of E&M services, the security deposit deducted from contractors shall be refunded within one month from the date of final payment or within one month from the date of completion of the maintenance contract whichever is earlier.

Clause 18

Contractor to Supply Tools & Plants etc.

The contractor shall provide at his own cost all materials machinery, tools & plants as specified in schedule F. In addition to this, appliances, implements, other plants, ladders, cordage, tackle, scaffolding and temporary works required for the proper execution of the

work, whether original, altered or substituted and whether included in the specifications or other documents forming part of the contract or referred to in these conditions or not, or which may be necessary for the purpose of satisfying or complying with the requirements of the Engineer-in-Charge as to any matter as to which under these conditions he is entitled to be satisfied, or which he is entitled to require together with carriage therefore to and from the work. The contractor shall also supply without charge the requisite number of persons with the means and materials, necessary for the purpose of setting out works, and counting, weighing and assisting the measurement for examination at any time and from time to time of the work or materials. Failing his so doing, the same may be provided by the Engineer-in-Charge at the expense of the contractor and the expenses may be deducted, from any money due to the contractor, under this contract or otherwise and/or from his security deposit or the proceeds of sale thereof, or of a sufficient portions thereof.

Clause 18A

Recovery of Compensation paid to Workmen

In every case in which by virtue of the provisions sub- section (1) of section 12 of the Workmen's Compensation Act. 1923, Government is obliged to pay compensation to a workman employed by the contractor, in execution of the works, Government will recover from the contractor , the amount of the compensation so paid: and without prejudice to the rights of the Government under sub- section(2) of section 12 , of the said Act, Government shall be at liberty to recover such amount or any part thereof by deducting it from the security deposit or from any sum due by Government to the contractor whether under this contract or otherwise. Government shall not be bound to contest any claim made against it under sub- section (1) of section 12, of the said Act, except on the written request of the contractor and upon his giving to Government full security for all costs for which Government might become liable in consequence of contesting such claim.

Clause 18B

Ensuring Payment and Amenities to Workers if Contractor fails

In every case in which by virtue of the provisions of the Contract Labour (Regulation and Abolition) Act, 1970, and of the Contract Labour (Regulation and Abolition) Central Rules, 1971, Government is obliged to pay any amounts of wages to a workman employed by the contractor in execution of the works, or to incur any expenditure in providing welfare and health amenities required to be provided under the above said Act and the rules under Clause 19H or under the C.P.W.D. Contractor's Labour Regulations, or under the Rules framed by Government from time to time for the protection of health and sanitary arrangements for workers employed by C.P.W.D. Contractors, Government will recover from the contractor, the amount of wages so paid or the amount of expenditure so incurred; and without prejudice to the rights of the Government under sub-section(2) of Section 20, and sub-section (4) of Section 21, of the Contract Labour (Regulation and Abolition) Act, 1970, Government shall be at liberty to recover such amount or any part thereof by deducting it from the security deposit or from any sum due by Government to the contractor whether under this contract or otherwise Government shall not be bound to contest any claim made against it under sub-section (1) of Section 20, sub-section (4) of Section 21, of the said Act, except on the written request of the contractor and upon his giving to the Government full security for all costs for which Government might become liable in contesting such claim.

Clause 19

Labour Laws to be complied by the Contractor

The contractor shall obtain a valid license under the Contract Labour (R&A) Act, 1970, and the Contract Labour (Regulation and Abolition) Central Rules, 1971, before the commencement of the work, and continue to have a valid license until the completion of the work.

The contractor shall also comply with provisions of the Inter-State Migrant Workmen (Regulation of Employment and Conditions of Service) Act, 1979.

The contractor shall also abide by the provisions of the Child Labour (Prohibition and Regulation) Act, 1986.

The contractor shall also comply with the provisions of the building and other Construction Workers (Regulation of Employment & Conditions of Service) Act, 1996 and the building and other Construction Workers Welfare Cess Act, 1996.

Any failure to fulfill these requirements shall attract the penal provisions of this contract arising out of the resultant non-execution of the work.

CLAUSE 19A

No labour below the age of fourteen years shall be employed on the work.

CLAUSE 19B

Payment of Wages

Payment of wages:

(i) The contractor shall pay to labour employed by him either directly or through subcontractors, wages not less than fair wages as defined in the C.P.W.D. Contractor's Labour Regulations or as per the provisions of the Contract Labour (Regulation and Abolition) Act, 1970 and the contract Labour (Regulation and Abolition) Central Rules, 1971, wherever applicable.

(ii) The contractor shall, notwithstanding the provisions of any contract to the contrary, cause to be paid fair wage to labour indirectly engaged on the work, including any labour engaged by his sub-contractors in connection with the said work, as if the labour had been immediately employed by him.

(iii) In respect of all labour directly or indirectly employed in the works for performance of the contractor's part of this contract, the contractor shall comply with or cause to be complied with the Central Public Works Department contractor's Labour Regulations made by Government from time to time in regard to payment of wages, wage period, deductions from wages recovery of wages not paid and deductions unauthorizedly made, maintenance of wage books or wage slips publication of scale of wage and other terms of employment, inspection and submission of periodical returns and all other matters of the like nature or as per the provisions of the Contract Labour (Regulation and Abolition) Act, 1970, and the Contract Labour (Regulation and Abolition) Central Rules, 1971, wherever applicable

(iv) (a) The Engineer-in-Charge concerned shall have the right to deduct from the moneys due to the contractor any sum required or estimated to be required for making good the loss suffered by a worker or workers by reason of non-fulfillment of the conditions of the contract for the benefit of the workers, non-payment of wages or of deductions made from his or their wages which are not justified by their terms of the contract or non-observance of the Regulations.

(b) Under the provision of Minimum Wages (Central) Rules, 1950, the contractor is bound to allow to the labours directly or indirectly employed in the works one day rest for 6 days continuous work and pay wages at the same rate as for duty. In the event of default, the Engineer-in-Charge shall have the right to deduct the sum or sums not paid on account of wages for weekly holidays to any labours and pay the same to the persons entitled thereto from any money due to the contractor by the Engineer-in-Charge concerned.

In the case of Union Territory of Delhi, however, as the all inclusive minimum daily wages fixed under Notification of the Delhi Administration No.F.12(162)MWO/ DAB/ 43884-91, dated 31-12-1979 as amended from time to time are inclusive of wages for the weekly day of rest, the question of extra payment for weekly holiday would not arise.

(v) The contractor shall comply with the provisions of the Payment of Wages Act, 1936, Minimum Wages Act, 1948, Employees Liability Act, 1938, Workmen's Compensation Act, 1923, Industrial Disputes Act, 1947, Maternity Benefits Act, 1961, and the Contractor's Labour (Regulation and Abolition) Act 1970, or the modifications thereof or any other laws relating thereto and the rules made there under from time to time.

(vi) The contractor shall indemnify and keep indemnified Government against payments to be made under and for the observance of the laws aforesaid and the C.P.W.D. Contractor's Labour Regulations without prejudice to his right to claim indemnity from his sub-contractors.

(vii) The laws aforesaid shall be deemed to be a part of this contract and any breach thereof shall be deemed to be a breach of this contract.

(viii) Whatever is the minimum wage for the time being, or if the wage payable is higher than such wage, such wage shall be paid by the contractor to the workmen directly without the intervention of Jamadar and that Jamadar shall not be entitled to deduct or recover any amount from the minimum wage payable to the workmen as and by way of commission or otherwise.

(ix) The contractor shall ensure that no amount by way of commission or otherwise is deducted or recovered by the Jamadar from the wage of workmen.

CLAUSE 19C

In respect of all labour directly or indirectly employed in the work for the performance of the contractor's part of this contract, the contractor shall at his own expense arrange for the safety provisions as per C.P.W.D. Safety Code framed from time to time and shall at his own expense provide for all facilities in connection therewith. In case the contractor fails to make arrangement and provide necessary facilities as aforesaid, he shall be liable to pay a penalty as decided by the authority mentioned in Schedule F for each default and in addition, the Engineer-in- Charge shall be at liberty to make arrangement and provide facilities as aforesaid and recover the costs incurred in that behalf from the contractor.

CLAUSE 19D

The contractor shall submit by the 4th and 19th of every month, to the Engineer-in-Charge, a true statement showing in respect of the second half of the preceding month and the first half of the current month respectively:-

(1) the number of labourers employed by him on the work,

(2) their working hours,

(3) the wages paid to them,

(4) the accidents that occurred during the said for night showing the circumstances under which they happened and the extent of damage and injury caused by them, and

(5) the number of female workers who have been allowed maternity benefit according to Clause 19F and the amount paid to them.

Failing which the contractor shall be liable to pay to Government, a sum as decided by the authority mentioned in Schedule F for each default or materially incorrect statement. The decision of the Divisional Officer shall be final in deducting from any bill due to the contractor, the amount levied as fine and be binding on the contractor.

CLAUSE 19E

In respect of all labour directly or indirectly employed in the works for the performance of the contractor's part of this contract, the contractor shall comply with or cause to be complied with all the rules framed by Government from time to time for the protection of health and sanitary arrangements for workers employed by the Central Public Works Department and its contractors.

CLAUSE 19F

Leave and pay during leave shall be regulated as follows:-

1. Leave :
   (i) in the case of delivery - maternity leave not exceeding 8 weeks, 4 weeks up to and including the day of delivery and 4 weeks following that day,
   (ii) in the case of miscarriage - upto 3 weeks from the date of miscarriage.
2. Pay :
   (i) in the case of delivery - leave pay during maternity leave will be at the rate of the women's average daily earnings, calculated on total wages earned on the days when full time work was done during a period of three months immediately preceding the date on which she gives notice that she expects to be confined or at the rate of Rupee one only a day whichever is greater.
   (ii) in the case of miscarriage - leave pay at the rate of average daily earning calculated on the total wages earned on the days when full time work was done during a period of three months immediately preceding the date of such miscarriage.
3. Conditions for the grant of Maternity Leave:

   No maternity leave benefit shall be admissible to a woman unless she has been employed for a total period of not less than six months immediately preceding the date on which she proceeds on leave.
4. The contractor shall maintain a register of Maternity (Benefit) in the Prescribed Form as shown in Appendix -I and II, and the same shall be kept at the place of work.

Clause 19G

In the event of the contractor(s) committing a default or breach of any of the provisions of the Central Public Works Department, Contractor's Labour Regulations and Model Rules for the protection of health and sanitary arrangements for the workers as amended from time to time or furnishing any information or submitting or filing any statement under the provisions of the above Regulations and' Rules which is materially incorrect, he/they shall, without prejudice to any other liability, pay to the Government a sum as decided by the authority mentioned in Schedule F for every default, breach or furnishing, making, submitting, filing such materially incorrect statements and in the event of the contractor(s) defaulting continuously in this respect, the penalty may be enhanced to as decided by the authority mentioned in Schedule F per day for each day of default subject to a maximum of 5 percent of the estimated cost of the work put to tender. The decision of the Engineer-in-Charge shall be final and binding on the parties.

Should it appear to the Engineer-in-Charge that the contractor(s) is/are not properly observing and complying with the provisions of the C.P.W.D. Contractor's Labour Regulations and Model Rules and the provisions of the Contract Labour (Regulation and Abolition) Act 1970, and the Contract Labour (R& A) Central Rules 1971, for the protection of health and sanitary arrangements for work-people employed by the contractor(s) (hereinafter referred as "the said Rules") the Engineer-in-Charge shall have power to give notice in writing to the contractor(s) requiring that the said Rules be complied with and the amenities prescribed therein be provided to the work-people within a reasonable time to be specified in the notice. If the contractor(s) shall fail within the period specified in the notice to comply with and/ observe the said Rules and to provide the amenities to the work-people as aforesaid, the Engineer-in-Charge shall have the power to provide the amenities hereinbefore mentioned at the cost of the contractor(s). The contractor(s) shall erect, make and maintain at his/their own expense and as per approved standards all necessary huts and sanitary arrangements required for his/their work-people on the site in connection with the execution of the works, and if the same shall not have been erected or constructed, according to approved standards, the Engineer-in-Charge shall have power to give notice in writing to the contractor(s) requiring that the said huts and sanitary arrangements be remodelled and/or reconstructed according to approved standards, and if the contractor(s) shall fail to remodel or reconstruct such huts and sanitary arrangements according to approved standards within the period specified in the notice, the Engineer-in-Charge shall have the power to remodel or reconstruct such huts and sanitary arrangements according to approved standards at the cost of the contractor(s).

CLAUSE 19H

The contractor(s) shall at his/their own cost provide his/their labour with a sufficient number of huts (hereinafter referred to as the camp) of the following specifications on a suitable plot of land to be approved by the Engineer-in-Charge.

(i) (a) The minimum height of each hut at the eaves level shall be 2.10m (7 ft.) and the floor area to be provided will be at the rate of 2.7 sq.m. (30 sq.ft.) for each member of the worker's family staying with the labourer.

(b) The contractor(s) shall in addition construct suitable cooking places having a minimum area of 1.80m x 1.50m (6'x5') adjacent to the hut for each family.

(c) The contractor(s) shall also construct temporary latrines and urinals for the use of the labourers each on the scale of not less than four per each one hundred of the total strength, separate latrines and urinals being provided for women.

(d) The contractor(s) shall construct sufficient number of bathing and washing places, one unit for every 25 persons residing in the camp. These bathing and washing places shall be suitably screened.

(ii) (a) All the huts shall have walls of sun-dried or burnt-bricks laid in mud mortar or other suitable local materials as may be approved by the Engineer-in-Charge. In case of sun-dried bricks, the walls should be plastered with mud gobri on both sides. The floor may be kutcha but plastered with mud gobri and shall be at least 15 cm (6") above the surrounding ground. The roofs shall be laid with thatch or any other materials as may be approved by the Engineer-in-Charge and the contractor shall ensure that throughout the period of their occupation, the roofs remain water-tight.

(b) The contractor(s) shall provide each hut with proper ventilation.

(c) All doors, windows, and ventilators shall be provided with suitable leaves for security purposes.

(d) There shall be kept an open space of at least 7.2m (8 yards) between the rows of huts which may be reduced to 6m (20 ft.) according to the availability of site with the approval of the Engineer-in-Charge. Back to back construction will be allowed.

(iii) Water Supply - The contractor(s) shall provide adequate supply of water for the use of labourers. The provisions shall not be less than two gallons of pure and wholesome water per head per day for drinking purposes and three gallons of clean water per head per day for bathing and washing purposes. Where piped water supply is available, supply shall be at stand posts and where the supply is from wells or river, tanks which may be of metal or masonry, shall be provided. The contractor(s) shall also at his/ their own cost make arrangements for laying pipe lines for water supply to his/ their labour camp from the existing mains wherever available, and shall pay all fees and charges therefore.

(iv) The site selected for the camp shall be high ground, removed from jungle.

(v) Disposal of Excreta - The contractor(s) shall make necessary arrangements for the disposal of excreta from the latrines by trenching or incineration which shall be according to the requirements laid down by the Local Health Authorities. If trenching or incineration is not allowed, the contractor(s) shall make arrangements for the removal of the excreta through the Municipal Committee/authority and inform it about the number of labourers employed so that arrangements may be made by such Committee/authority for the removal of the excreta. All charges on this account shall be borne by the contractor and paid direct by him to the Municipality/authority. The contractor shall provide one sweeper for every eight seats in case of dry system.

(vi) Drainage - The contractor(s) shall provide efficient arrangements for draining away sullage water so as to keep the camp neat and tidy.

(vii) The contractor(s) shall make necessary arrangements for keeping the camp area sufficiently lighted to avoid accidents to the workers.

(viii) Sanitation - The contractor(s) shall make arrangements for conservancy and sanitation in the labour camps according to the rules of the Local Public Health and Medical Authorities.

Clause 19I

The Engineer-in-Charge may require the contractor to dismiss or remove from the site of the work any person or persons in the contractors' employ upon the work who may be incompetent or misconduct himself and the contractor shall forthwith comply with such requirements. In respect of maintenance/repair or renovation works etc. where the labour have an easy access to the individual houses, the contractor shall issue identity cards to the labourers, whether temporary or permanent and he shall be responsible for any untoward action on the part of such labour.

CLAUSE 19J

It shall be the responsibility of the contractor to see that the building under construction is not occupied by anybody unauthorized during construction, and is handed over to the Engineer-in-Charge with vacant possession of complete building. If such building though completed is occupied illegally, then the Engineer-in-Charge shall have the option to refuse to accept the said building/buildings in that position. Any delay in acceptance on this account will be

treated as the delay in completion and for such delay, a levy upto 5% of tendered value of work may be imposed by the Superintending Engineer whose decision shall be final both with regard to the justification and quantum and be binding on the contractor.

However, the SE/ Superintending Engineer cum Project Director/ Chief Engineer CPM cum ED through a notice, may require the contractor to remove the illegal occupation any time on or before construction and delivery.

Clause 19K

Employment of skilled/semi skilled workers

The contractor shall, at all stages of work, deploy skilled/semi skilled tradesmen who are qualified and possess certificate in particular trade from CPWD Training Institute/Industrial Training Institute/ National Institute of construction Management and Research (NICMAR)/ National Academy of Construction, CIDC or any similar reputed and recognized Institute managed/ certified by State/Central Government. The number of such qualified tradesmen shall not be less than 20% of total skilled/semi skilled workers required in each trade at any stage of work. The contractor shall submit number of man days required in respect of each trade, its scheduling and the list of qualified tradesmen along with requisite certificate from recognized Institute to Engineer in charge for approval. Notwithstanding such approval, if the tradesmen are found to have inadequate skill to execute the work of respective trade, the contractor shall substitute such tradesmen within two days of written notice from Engineer-in- Charge. Failure on the part of contractor to obtain approval of Engineer-in-Charge or failure to deploy qualified tradesmen will attract a compensation to be paid by contractor at the rate specified in schedule 'F' per such tradesman per day. Decision of Engineer in Charge as to whether particular tradesman possesses requisite skill and amount of compensation in case of default shall be final and binding.

Provided always, that the provisions of this clause, shall not be applicable for works with estimated cost put to tender being less than Rs. 5 crores.

For work costing more than Rs. 10 Crores, and upto Rs. 50 Crores, the contractor shall arrange on site training as per National Skill Development Corporation (NSDC) norms for at least 20% of the unskilled workers engaged in the project in co-ordination with the CPWD Regional Training Institute & National Skill Development Corporation (NSDC) for certification at the level of skilled/semi skilled tradesmen.

For works costing more than Rs. 50 Crores, the contractor shall arrange on site training as per National Skill Development Corporation (NSDC) norms for at least 30% of the unskilled worker engaged in the project in co-ordination with the CPWD Regional Training Institute & National Skill Development Corporation (NSDC) for certification at the level of skilled/semi skilled tradesmen. The cost of such training as stated above shall be born by the Government. The necessary space and workers shall be provided by the contractor and no claim what so ever shall be entertained.

Clause 19L

Contribution of EPF and ESI

The ESI and EPF contributions on the part of employer in respect of this contract shall be paid by the contractor. These contributions on the part of the employer paid by the contractor shall be reimbursed by the Engineer-in-charge to the contractor on actual basis. The verification of deployment of labour will be done through biometric attendance system or any other suitable method by the Engineer in Charge. The applicable and eligible amount of EPF & ESI shall be reimbursed preferably within 7 days but not later than 30 days of submission of documentary proof of payment provided same are in order.

Clause 20

Minimum Wages Act to be Complied With

The contractor shall comply with all the provisions of the Minimum Wages Act, 1948, and Contract Labour (Regulation and Abolition) Act, 1970, amended from time to time and rules framed there under and other labour laws affecting contract labour that may be brought into force from time to time.

Clause 21

Work not to be sublet. Action in case of in solvency

The contract shall not be assigned or sublet without the written approval of the Engineer-in-Charge. And if the contractor shall assign or sublet his contract, or attempt to do so, or become insolvent or commence any insolvency proceedings or make any composition with his creditors or attempt to do so, or if any bribe, gratuity, gift, loan, perquisite, reward or advantage pecuniary or otherwise, shall either directly or indirectly, be given, promised or offered by the contractor, or any of his servants or agent to any public officer or person in the employ of Government in any way relating to his office or employment, or if any such officer or person shall become in any way directly or indirectly interested in the contract, the Engineer-in-Charge on behalf of the President of India shall have power to adopt the course specified in Clause 3 hereof in the interest of Government and in the event of such course being adopted, the consequences specified in the said Clause 3 shall ensue.

Clause 22

All sums payable by way of compensation under any of these conditions shall be considered as reasonable compensation to be applied to the use of Government without reference to the actual loss or damage sustained and whether or not any damage shall have been sustained.

Clause 23

Changes in firm's Constitution to be Intimated

Where the contractor is a partnership firm, the previous approval in writing of the Engineer-in-Charge shall be obtained before any change is made in the constitution of the firm. Where the contractor is an individual or a Hindu undivided family business concern, such approval as aforesaid shall likewise be obtained before the contractor enters into any partnership agreement where under the partnership firm would have the right to carry out the works hereby undertaken by the contractor. If previous approval as aforesaid is not obtained, the contract shall be deemed to have been assigned in contravention of Clause 21 hereof and the same action may be taken, and the same consequences shall ensue as provided in the said Clause 21.

Clause 24

Life Cycle Cost

The contractor shall be responsible for safety, quality and soundness of the buildings including structural elements beyond maintenance period. The contractor shall have obligation to rectify such defects minimum up to 5 (five) years from the date of completion of work. The defects have to be rectified within a reasonable time not exceeding forty five days after issue of notice by Engineer- in- Charge.If contractor does not take corrective action within 45 days, then action for debarring of the agency shall be taken by the appropriate authority.

Clause 25

Settlement of Disputes & Arbitration

Except where otherwise provided in the contract, all questions and disputes relating to the meaning of the specifications, design, drawings and instructions here-in before mentioned and as to the quality of workmanship or materials used on the work or as to any other question, claim, right, matter or thing whatsoever in any way arising out of or relating to the contract, designs, drawings, specifications, estimates, instructions, orders or these conditions or otherwise concerning the works or the execution or failure to execute the same whether arising during the progress of the work or after the cancellation, termination, completion or abandonment thereof shall be dealt with as mentioned hereinafter:

(i) If the contractor considers any work demanded of him to be outside the requirements of the contract, or disputes any drawings, record or decision given in writing by the Engineer-in-Charge or if the Engineer in Charge considers any act or decision of the contractor on any matter in connection with or arising out of the contract or carrying out of the work, to be unacceptable and is disputed, such party shall promptly within 15 days of the arising of the disputes request the Chief Engineer/ CPM, or where there is no Chief Engineer/CPM, request the Additional Director General/Special Director General ,who shall refer the disputes to Dispute Reressal Committee (DRC) within 15 days along with a list of disputes with amounts claimed if any in respect of each such dispute. The Dispute Redressal Committee (DRC) give its decision within a period of 60 days extendable by 30 days by consent of both the parties from the receipt of reference from CE/CPM/ADG/SDG. The constitution of Dispute Redressal Committee (DRC) shall be as indicated in Schedule 'F'. Provided that no party shall be represented before the Dispute Redressal Committee by an advocate/legal counsel etc.

The DRC will submit its decision to the concerned ADG/SDG for acceptance. ADG/ SDG in a time limit of 30 days from receipt of DRC decision will convey acceptance or other wise on the said decision .If the Dispute Redressal Committee (DRC) fails to give its decision within the aforesaid period or the ADG/SDG fails to give his decision in the aforesaid time limit or any party is dissatisfied with the decision of Dispute Redressal Committee (DRC)/ ADG/ SDG theneither party may within a period of 30 days from the receipt of the decision of Dispute Redressal Committee (DRC)/ ADG/ SDG or on expiry of aforesaid the time limits available to DRC/ ADG/SDG ,may give notice to the Chief Engineer/CPM, CPWD, in charge of the work or if there be no Chief Engineer/ CPM,, the Additional Director General /Special Director General concerned or if there be no Additional Director General/ Special Director General, the Director General, CPWD for appointment of arbitrator on prescribed proforma as per Appendix XVII under intimation to the other party.

It is a term of contract that each party invoking arbitration must exhaust the aforesaid mechanism of settlement of claims/disputes prior to invoking arbitration.

The CE/ADG/ SDG shall in such case appoint the sole arbitrator or one of the three arbitrators as the case may be within 30 days of receipt of such a request and refer such disputes to arbitration. Wherever the Arbitral Tribunal consists of three Arbitrators, the contractor shall appoint one arbitrator within 30 days of making request for arbitration or of receipt of request by Engineer-in-charge to CE/ADG/ SDG /DG for appointment of arbitrator, as the case may be, and two appointed arbitrators shall appoint the third arbitrator who shall act as the Presiding Arbitrator. In the event of

(a) A party fails to appoint the second Arbitrator, or

(b) The two appointed Arbitrators fail to appoint the Presiding Arbitrator, then the Director General, CPWD shall appoint the second or Presiding Arbitrator as the case may be.

(ii) Dispute or difference shall be referred for adjudication through arbitration by a Tribunal having sole arbitrator where claimed amount is Rs. 20 Crore or less. Where claimed Value is more than Rs. 20 Crore, Tribunal shall consist of three Arbitrators as above. The requirements of the Arbitration and Conciliation Act, 1996 (26 of 1996) and any further statutory modification or re-enactment thereof and the rules made there under and for the time being in force shall be applicable.

It is a term of this contract thatthe party invoking arbitration shall give a list of disputes with amounts claimed, if any, in respect of each such dispute along with the notice for appointment of arbitrator and giving reference to the decision of the ADG/ SDG on the finding / recommendation of DRC.

It is also a term of this contract that member(s) of the Arbitration Tribunal shall be a Graduate Engineer with experience in handling public works engineering contracts, and further he shall have earlier worked at a level not lower than Chief Engineer/ equivalent (i.e. Joint Secretary level of Government of India). This shall be treated as a mandatory qualification to be appointed as arbitrator.

Parties, before or at the time of appointment of Arbitral Tribunal may agree in writing for fast track arbitration as per the Arbitration and Conciliation Act, 1996 (26 of 1996) as amended in 2015.

Subject to provision in the Arbitration and Conciliation Act, 1996 (26 of 1996) as amended in 2015 whereby the counter claims if any can be directly filed before the arbitrator without any requirement of reference by the appointing authority. The arbitrator shall adjudicate on only such disputes as are referred to him by the appointing authority and give separate award against each dispute and claim referred to him and in all cases where the total amount of the claims by any party exceeds Rs. 1,00,000/-, the arbitrator shall give reasons for the award.

It is also a term of the contract that fees payable to arbitral tribunal shall be as approved by DG, CPWD, OM issued vide no.2/2006/SE(TLC)/CSQ /137 dated 19-11-2019 (or its latest amendment as approved by DG, CPWD). This fee shall be shared equally by parties.

The place of arbitration shall be as mentioned in Schedule F. In case there is no mention of place of arbitration, the arbitral tribunal shall determine the place of arbitration.

The venue of the arbitration shall be such place as may be fixed by the Arbitral Tribunal in consultation with both the parties. Failing any such agreement, then the Arbitral Tribunal shall decide the venue.

Clause 26

Contractor to Indemnify Govt. against Patent Rights

The contractor shall fully indemnify and keep indemnified the President of India against any action, claim or proceeding relating to infringement or use of any patent or design or any alleged patent or design rights and shall pay any royalties which may be payable in respect of any article or part thereof included in the contract. In the event of any claims made under or action brought against Government in respect of any such matters as aforesaid, the contractor shall be immediately notified thereof and the contractor shall be at liberty, at his own expense, to settle any dispute or to conduct any litigation that may arise there from, provided that the contractor shall not be liable to indemnify the President of India if the infringement of the patent or design or any alleged patent or design right is the direct result of an order passed by the Engineer-in-Charge in this behalf.

Clause 27

Lumpsum Provisions in Tender.

When the estimate on which a tender is made includes lump sum in respect of parts of the work, the contractor shall be entitled to payment in respect of the items of work involved or the part of the work in question at the same rates as are payable under this contract for such items, or if the part of the work in question is not, in the opinion of the Engineer-in-Charge payable of measurement, the Engineer-in-Charge may at his discretion pay the lump-sum amount entered in the estimate, and the certificate in writing of the Engineer-in-Charge shall be final and conclusive against the contractor with regard to any sum or sums payable to him under the provisions of the clause.

Clause 28

Action where no Specifications are Specified

In the case of any class of work for which there is no such specifications as referred to in Clause 11, such work shall be carried out in accordance with the Bureau of Indian Standards Specifications. In case there are no such specifications in Bureau of Indian Standards, the work shall be carried out as per manufacturers' specifications, if not available then as per state/ District Specifications. In case there are no such specifications as required above, the work shall be carried out in all respects in accordance with the instructions and requirements of the Engineer-in-Charge.

Clause 29

Withholding and lien in respect of sum due from Contractor

(i) Whenever any claim or claims for payment of a sum of money arises out of or under the contract or against the contractor, the Engineer-in-Charge or the Government shall be entitled to withhold and also have a lien to retain such sum or sums in whole or in part from the security, if any deposited by the contractor and for the purpose aforesaid, the Engineer-in-Charge or the Government shall be entitled to withhold the security deposit, if any, furnished as the case may be and also have a lien over the same pending finalization or adjudication of any such claim. In the event of the security being insufficient to cover the claimed amount or amounts or if no security has been taken from the contractor, the Engineer-in-Charge or the Government shall be entitled to withhold and have a lien to retain to the extent of such claimed amount or amounts referred to above, from any sum or sums found payable or which may at any time thereafter become payable to the contractor under the same contract or any other contract with the Engineer-in-Charge of the Government or any contracting person through the Engineer-in-Charge pending finalization of adjudication of any such claim.

It is an agreed term of the contract that the sum of money or moneys so withheld or retained under the lien referred to above by the Engineer-in-Charge or Government will be kept withheld or retained as such by the Engineer-in-Charge or Government till the claim arising out of or under the contract is determined by the arbitrator(if the contract is governed by the arbitration clause) by the competent court, as the case may be and that the contractor will have no claim for interest or damages whatsoever on any account in respect of such withholding or retention under the lien referred to above and duly notified as such to the contractor. For the purpose of this clause, where the contractor is a partnership firm or a limited company, the Engineer-in-Charge or the Government shall be entitled to withhold and also have a lien to retain towards such claimed amount or amounts in whole or in part from any sum found payable to any partner/limited company as the case may be, whether in his individual capacity or otherwise.

(ii) Government shall have the right to cause an audit and technical examination of the works and the final bills of the contractor including all supporting vouchers, abstract, etc., to be made after payment of the final bill and if as a result of such audit and technical examination any sum is found to have been overpaid in respect of any work done by the contractor under the contract or any work claimed to have been done by him under the contract and found not to have been executed, the contractor shall be liable to refund the amount of over-payment and it shall be lawful for Government to recover the same from him in the manner prescribed in sub-clause (i) of this clause or in any other manner legally permissible; and if it is found that the contractor was paid less than what was due to him under the contract in respect of any work executed by him under it, the amount of such under payment shall be duly paid by Government to the contractor, without any interest thereon whatsoever.

Provided that the Government shall not be entitled to recover any sum overpaid, nor the contractor shall be entitled to payment of any sum paid short where such payment has been agreed upon between the Superintending Engineer or Executive Engineer on the one hand and the contractor on the other under any term of the contract permitting payment for work after assessment by the Superintending Engineer or the Executive Engineer.

Clause 29A

Lien in respect of claims in other Contracts

Any sum of money due and payable to the contractor (including the security deposit returnable to him) under the contract may be withheld or retained by way of lien by the Engineer-in-Charge or the Government or any other contracting person or persons through Engineer-in-Charge against any claim of the Engineer-in-Charge or Government or such other person or persons in respect of payment of a sum of money arising out of or under any other contract made by the contractor with the Engineer- in-Charge or the Government or with such other person or persons. It is an agreed term of the contract that the sum of money so withheld or retained under this clause by the Engineer-in-Charge or the Government will be kept withheld or retained as such by the Engineer-in-Charge or the Government or till his claim arising out of the same contract or any other contract is either mutually settled or determined by the arbitration clause or by the competent court, as the case may be and that the contractor shall have no claim for interest or damages whatsoever on this account or on any other ground in respect of any sum of money withheld or retained under this clause and duly notified as such to the contractor.

Clause 29B

Employment of coal mining or controlled area labour not Permissible

The contractor shall not employ coal mining or controlled area labour falling under any category whatsoever on or in connection with the work or recruit labour from area within a radius of 32 km (20 miles) of the controlled area. Subject as above the contractor shall employ imported labour only i.e., deposit imported labour or labour imported by contractors from area, from which import is permitted.

Where ceiling price for imported labour has been fixed by State or Regional Labour Committees not more than that ceiling price shall be paid to the labour by the contractor.

The contractor shall immediately remove any labourer who may be pointed out by the Engineer in-Charge as being a coal mining or controlled area labourer. Failure to do so shall render the contractor liable to pay to Government a sum calculated at the rate of Rs.10/- per day per labourer. The certificate of the Engineer-in-Charge about the number of coal mining or controlled area labourer and the number of days for which they worked shall be final and binding upon all parties to this contract.

It is declared and agreed between the parties that the aforesaid stipulation in this clause is one in which the public are interested within the meaning of the exception in Section 74 of Indian Contract Act, 1872.

Explanation:- Controlled Area means the following areas:

Districts of Dhanbad, Hazaribagh, Jamtara - a Sub-Division under Santhal Pargana Commissionery, Districts of Bankuara, Birbhum, Burdwan, District of Bilaspur.

Any other area which may be declared a Controlled Area by or with the approval of the Central Government.

Water for Works

Clause 30

The contractor(s) shall make his/their own arrangements for water required for the work and nothing extra will be paid for the same. This will be subject to the following conditions.

(i) That the water used by the contractor(s) shall be fit for construction purposes to the satisfaction of the Engineer-in-Charge.

(ii) The Engineer-in-Charge shall make alternative arrangements for supply of water at the risk and cost of contractor(s) if the arrangements made by the contractor(s) for procurement of water are in the opinion of the Engineer-in- Charge, unsatisfactory.

Alternate water Arrangements

Clause 30A

The contractor shall be allowed to construct temporary wells in Government land for taking water for construction purposes only after he has got permission of the Engineer-in- Charge in writing. No charges shall be recovered from the contractor on this account, but the contractor shall be required to provide necessary safety arrangements to avoid any accidents or damage to adjacent buildings, roads and service lines. He shall be responsible for any accidents or damage caused due to construction and subsequent maintenance of the wells and shall restore the ground to its original condition after the wells are dismantled on completion of the work.

Hire of Plant & Machinery

Clause 31

The contractor shall arrange at his own expense all tools, plant, machinery and equipment (hereinafter referred to as T&P) required for execution of the work.

Employment of Technical Staff and employees

Clause 32

Contractors Superintendence, Supervision, Technical Staff & Employees

(i) The contractor shall provide all necessary superintendence during execution of the work and all along thereafter as may be necessary for proper fulfilling of the obligations under the contract.

The contractor shall immediately after receiving letter of acceptance of the tender and before commencement of the work, intimate in writing to the Engineer-in-Charge, the name(s), qualifications, experience, age, address(s) and other particulars along with certificates, of the principal technical representative to be in charge of the work and other technical representative(s) who will be supervising the work. Minimum requirement of such technical representative(s) and their qualifications and experience shall not be lower than specified in Schedule 'F'. Even of the contractor (or partner(s) in case of firm/ company)is himself / herself an Engineers, it is necessary on the part of the contractor to Employ principal technical representative / technical representative (s) as per stipulation in Schedule 'F'

The Engineer-in-Charge shall within 3 days of receipt of such communication intimate in writing his approval or otherwise of such a representative(s) to the contractor. Any such approval may at any time be withdrawn and in case of such withdrawal, the contractor shall appoint another such representative(s) according to the provisions of this clause. Decision of the tender accepting authority shall be final and binding on the contractor in this respect. Such a principal technical representative and other technical representative(s) shall be appointed by the contractor soon after receipt of the approval from Engineer-in-charge and shall be available at site before start of work.

All the provisions applicable to the principal technical representative under the Clause will also be applicable to other technical representative(s) The principal technical representative and other technical representative(s) shall be present at the site of work for supervision at all times when any construction activity is in progress and also present himself/themselves, as required, to the Engineer-in-Charge and/or his designated representative to take instructions. Instructions given to the principal technical representative or other technical representative(s) shall be deemed to have the same force as if these have been given to the contractor. The principal technical representative and other technical representative(s) shall be actually available at site fully during all stages of execution of work, during recording/checking/test checking of measurements of works and whenever so required by the Engineer-in-Charge and shall also note down instructions conveyed by the Engineer-in-Charge or his designated representative(s) in the site order book and shall affix his/their signature in token of noting down the instructions and in token of acceptance of measurements/checked measurements/ test checked measurements. The representative(s) shall not look after any other work. Substitutes, duly approved by Engineer-in-Charge of the work in similar manner as aforesaid shall be provided in event of absence of any of the representative(s) by more than two days.

If the Engineer-in-Charge, whose decision in this respect is final and binding on the contractor, is convinced that no such technical representative(s) is/are effectively appointed or is/are effectively attending or fulfilling the provision of this clause, a recovery (non refundable) shall be effected from the contractor as specified in Schedule 'F' and the decision of the Engineer-In-Charge as recorded in the site order book and measurement recorded checked/test checked in Measurement Books shall be final and binding on the contractor. Further if the contractor fails to appoint suitable technical Principal technical representative and/or other technical representative(s) and if such appointed persons are not effectively present or are absent by more than two days without duly approved substitute or do not discharge their responsibilities satisfactorily, the Engineer-in-Charge shall have full powers to suspend the execution of the work until such date as suitable other technical representative(s) is/are appointed and the contractor shall be held responsible for the delay so caused to the work. The contractor shall submit a certificate of employment of the technical representative(s) (in the form of copy of Form-16 or CPF deduction issued to the Engineers employed by him) along with every on account bill/ final bill and shall produce evidence if at any time so required by the Engineer-in-Charge.

(ii) The contractor shall provide and employ on the site only such technical assistants as are skilled and experienced in their respective fields and such foremen and supervisory staff as are competent to give proper supervision to the work.

The contractor shall provide and employ skilled, semiskilled and unskilled labour as is necessary for proper and timely execution of the work.

The Engineer-in-Charge shall be at liberty to object to and require the contractor to remove from the works any person who in his opinion misconducts himself, or is incompetent or negligent in the performance of his duties or whose employment is otherwise considered by the Engineer-in-Charge to be undesirable. Such person shall not be employed again at works site without the written permission of the Engineer-in-Charge and the persons so removed shall be replaced as soon as possible by competent substitutes.

Clause 33

Levy/Taxes payable by Contractor

(i) GST, Building and other Construction Workers Welfare Cess or any other tax, levy or Cess in respect of input for or output by this contract shall be payable by the contractor and Government shall not entertain any claim whatsoever in this respect except as provided under Clause 34.

(ii) The contractor shall deposit royalty and obtain necessary permit for supply of the red bajri, stone, kankar, etc. from local authorities.

If pursuant to or under any law, notification or order any royalty, cess or the like becomes payable by the Government of India and does not any time become payable by the contractor to the State Government, Local authorities in respect of any material used by the contractor in the works, then in such a case, it shall be lawful to the Government of India and it will have the right and be entitled to recover the amount paid in the circumstances as aforesaid from dues of the contractor.

Clause 34

Conditions for reimbursement of levy/taxes if levied after receipt of Tenders

(i) All tendered rates shall be inclusive of any tax, levy or cess applicable on last stipulated date of receipt of tender including extension if any. No adjustment i.e. increase or decrease shall be made for any variation in the rate of GST, Building and Other Construction Workers Welfare Cess or any tax, levy or cess applicable on inputs.

However, effect of variation in rates of GST or Building and Other Construction Workers Welfare Cess or imposition or repeal of any other tax, levy or cess applicable on output of the works contract shall be adjusted on either side, increase or decrease.

Provided further that for Building and Other Construction Workers Welfare Cess or any tax (other than GST), levy or cess varied or imposed after the last date of receipt of tender including extension if any, any increase shall be reimbursed to the contractor only if the contractor necessarily and properly pays such increased amount of taxes/levies/cess.

Provided further that such increase including GST shall not be made in the extended period of contract for which the contractor alone is responsible for delay as determined by authority for extension of time under Clause 5 in Schedule F.

(ii) The contractor shall keep necessary books of accounts and other documents for the purpose of this condition as may be necessary and shall allow inspection of the same by a duly authorized representative of the Government and/or the Engineer-in-Charge and shall also furnish such other information/document as the Engineer-in-Charge may require from time to time.

(iii) The contractor shall, within a period of 30 days of the imposition of any such further tax or levy or cess, or variation or repeal of such tax or levy or cess give a written notice thereof to the Engineer-in-charge that the same is given pursuant to this condition, together with all necessary information relating thereto.

Clause 35

Termination of Contract on death of contractor

Without prejudice to any of the rights or remedies under this contract, if the contractor dies, the Engineer-in-Charge on behalf of the President of India shall have the option of terminating the contract without levy of compensation to the contractor.

Clause 36

If relative working in CPWD then the contractor not allowed to tender

The contractor shall not be permitted to tender for works in the CPWD circle (Division in case of contractors of Horticulture/Nursery categories) responsible for award and execution of contracts in which his near relative is posted as Divisional Accountant or as an officer in any capacity between the grades of the Superintending Engineer and Junior Engineer (both

inclusive). He shall also intimate the names of persons who are working with him in any capacity or are subsequently employed by him and who are near relatives to any Gazetted Officer in the C.P.W.D. or in the Ministry of Housing and Urban Affairs. Any breach of this condition by the contractor would render him liable to be removed from the approved list of contractors of this Department. If however the contractor is registered in any other department, he shall be debarred from tendering in CPWD for any breach of this condition.

NOTE: By the term "near relatives" is meant wife, husband, parents and grandparents, children and grand children, brothers and sisters, uncles, aunts and cousins and their corresponding in-laws.

Clause 37

No Gazetted Engineer to work as Contractor within one year of retirement

No engineer of gazetted rank or other gazetted officer employed in engineering or administrative duties in an engineering department of the Government of India shall work as a contractor or employee of a contractor for a period of one year after his retirement from government service without the previous permission of Government of India in writing. This contract is liable to be cancelled if either the contractor or any of his employees is found at any time to be such a person who had not obtained the permission of Government of India as aforesaid, before submission of the tender or engagement in the contractor's service, as the case may be.

Clause 38

Theoretical consumption of Material

(i) After completion of the work and also at any intermediate stage in the event of Non reconciliation of materials issued theoretical quantity of materials used in the work shall be calculated on the basis and method given hereunder:-

(a) Quantity of cement & bitumen shall be calculated on the basis of quantity of cement & bitumen required for different items of work as shown in the Schedule of Rates mentioned in Schedule 'F'. In case any item is executed for which standard constants for the consumption of cement or bitumen are not available in the above mentioned schedule/statement or cannot be derived from the same shall be calculated on the basis of standard formula to be laid down by the Engineer-in-Charge.

(b) Theoretical quantity of steel reinforcement or structural steel sections shall be taken as the quantity required as per design or as authorized by Engineer-in-Charge, including authorized lappages, chairs etc. plus 3% wastage due to cutting into pieces, such theoretical quantity being determined and compared with the actual, each diameter wise, section wise and category wise separately.

(c) Theoretical quantity of G.I. & C.I. or other pipes, conduits, wires and cables, pig lead and G.I./M.S. sheets shall be taken as quantity actually required and measured plus 5% for wastage due to cutting into pieces (except in the case of G.I./M.S. sheets it shall be 10%), such determination & comparison being made diameter wise & category wise.

(d) For any other material as per actual requirements.

Over the theoretical quantities of materials so computed a variation shall be allowed as specified in Schedule 'F'For non scheduled items, the decision of the SE/ Superintending Engineer cum PD/ CE/ CPM cum ED regarding theoretical quantities of materials which should have been actually used, shall be final and binding on the contractor.

(ii) The said action under this clause is without prejudice to the right of the Government to take action against the contractor under any other conditions of contract for not doing the work according to the prescribed specifications.

Clause 39

Compensation during warlike situations

The work (whether fully constructed or not) and all materials, machines, tools and plants, scaffolding, temporary buildings and other things connected therewith shall be at the risk of the contractor until the work has been delivered to the Engineer-in-Charge and a certificate from him to that effect obtained. In the event of the work or any materials properly brought to the site for incorporation in the work being damaged or destroyed in consequence of hostilities or warlike operation, the contractor shall when ordered (in writing) by the Engineer-in-Charge to remove any debris from the site, collect and properly stack or remove in store all serviceable materials salvaged from the damaged work and shall be paid at the contract rates in accordance with the provision of this agreement for the work of clearing the site of debris, stacking or removal of serviceable material and for reconstruction of all works ordered by the Engineer-in-Charge, such payments being in addition to compensation upto the value of the work originally executed before being damaged or destroyed and not paid for. In case of works damaged or destroyed but not already measured and paid for, the compensation shall be assessed by the Divisional Officer upto Rs.2,00,000/-- and by the next higher officer concerned for a higher amount. The contractor shall be paid for the damages/destruction suffered and for restoring the material at the rate based on analysis of rates tendered for in accordance with the provision of the contract. The certificate of the Engineer-in-Charge regarding the quality and quantity of materials and the purpose for which they were collected shall be final and binding on all parties to this contract.

Provided always that no compensation shall be payable for any loss in consequence of hostilities or warlike operations (a) unless the contractor had taken all such precautions against air raid as are deemed necessary by the A.R.P. (Air Raid precaution) Officers or the Engineer-in-Charge (b) for any material etc. not on the site of the work or for any tools, plant, machinery, scaffolding, temporary building and other things not intended for the work. In the event of the contractor having to carry out reconstruction as aforesaid, he shall be allowed such extension of time for its completion as is considered reasonable by the Divisional Officer.

Clause 40

Apprentices Act provisions to be complied with

The contractor shall comply with the provisions of the Apprentices Act, 1961 and the rules and orders issued there under from time to time. If he fails to do so, his failure will be a breach of the contract and the Superintending Engineer may, in his discretion, cancel the contract. The contractor shall also be liable for any pecuniary liability arising on account of any violation by him of the provisions of the said Act.

Clause 41

Release of Security deposit after labour clearance

Release of Security Deposit of the work shall not be refunded till the contractor produces a clearance certificate from the Labour Officer. As soon as the work is virtually complete the contractor shall apply for the clearance certificate to the Labour Officer under intimation to the Engineer-in-Charge. The Engineer-in-Charge, on receipt of the said communication, shall write to the Labour Officer to intimate if any complaint is pending against the contractor in respect of the work. If no complaint is pending, on record till after 3 months after completion of the work and/or no communication is received from the Labour Officer to this effect till six months after the date of completion, it will be deemed to have received the clearance certificate and the Security Deposit will be released if otherwise due.

Note :- In case of any discrepancies between Hindi and English version, English version will prevail.

INTEGRITY PACT

To,

……..

……

……

Sub: NIT No. ……. for the work

Dear Sir,

It is here by declared that CPWD is committed to follow the principle of transparency, equity and competitiveness in public procurement.

The subject Notice Inviting Tender (NIT) is an invitation to offer made on the condition that the Bidder will sign the integrity Agreement, which is an integral part of tender/bid documents, failing which the tenderer/bidder will stand disqualified from the tendering process and the bid of the bidder would be summarily rejected.

This declaration shall form part and parcel of the Integrity Agreement and signing of the same shall be deemed as acceptance and signing of the Integrity Agreement on behalf of the CPWD.

Yours faithfully

Executive Engineer

INTEGRITY PACT

To,

Executive Engineer,

……

……

Sub: Submission of Tender for the work of**.**

Dear Sir,

I/We acknowledge that CPWD is committed to follow the principles thereof as enumerated in the Integrity Agreement enclosed with the tender/bid document.

I/We agree that the Notice Inviting Tender (NIT) is an invitation to offer made on the condition that I/We will sign the enclosed integrity Agreement, which is an integral part of tender documents, failing which I/We will stand disqualified from the tendering process. I/We acknowledge that THE MAKING OF THE BID SHALL BE REGARDED AS AN UNCONDITIONAL AND ABSOLUTE ACCEPTANCE of this condition of the NIT.

I/We confirm acceptance and compliance with the Integrity Agreement in letter and spirit and further agree that execution of the said Integrity Agreement shall be separate and distinct from the main contract, which will come into existence when tender/bid is finally accepted by CPWD. I/We acknowledge and accept the duration of the Integrity Agreement, which shall be in the line with Article 1 of the enclosed Integrity Agreement.

I/We acknowledge that in the event of my/our failure to sign and accept the Integrity Agreement, while submitting the tender/bid, CPWD shall have unqualified, absolute and unfettered right to disqualify the tenderer/bidder and reject the tender/bid is accordance with terms and conditions of the tender/ bid.

Yours faithfully

(Duly authorized signatory of the Bidder)

To be signed by the bidder and same signatory competent / authorized to sign the relevant contract on behalf of CPWD.

INTEGRITY AGREEMENT

This Integrity Agreement is made at ..... on this ..... day of ..... 20 .....

BETWEEN

President of India represented through Executive Engineer,

.....
(Name of Division)

CPWD, ..., (Hereinafter referred as the
(Address of Division)

'Principal/Owner', which expression shall unless repugnant to the meaning or context hereof include its successors and permitted assigns)

AND

.....
(Name and Address of the Individual/firm/Company)

through ..... (Hereinafter referred to as the
(Details of duly authorized signatory)

"Bidder/Contractor" and which expression shall unless repugnant to the meaning or context hereof include its successors and permitted assigns)

Preamble

WHEREAS the Principal / Owner has floated the Tender (NIT No ....) (hereinafter referred to as "Tender/Bid") and intends to award, under laid down organizational procedure, contract for .....

.....
(Name of work)

hereinafter referred to as the "Contract".

AND WHEREAS the Principal/Owner values full compliance with all relevant laws of the land, rules, regulations, economic use of resources and of fairness/transparency in its relation with its Bidder(s) and Contractor(s).

AND WHEREAS to meet the purpose aforesaid both the parties have agreed to enter into this Integrity Agreement (hereinafter referred to as "Integrity Pact" or "Pact"), the terms and conditions of which shall also be read as integral part and parcel of the Tender/Bid documents and Contract between the parties.

NOW, THEREFORE, in consideration of mutual covenants contained in this Pact, the parties hereby agree as follows and this Pact witnesses as under:

Article 1: Commitment of the Principal/Owner

(1) The Principal/Owner commits itself to take all measures necessary to prevent corruption and to observe the following principles:

(a) No employee of the Principal/Owner, personally or through any of his/her family members, will in connection with the Tender, or the execution of the Contract, demand, take a promise for or accept, for self or third person, any material or immaterial benefit which the person is not legally entitled to.

(b) The Principal/Owner will, during the Tender process, treat all Bidder(s) with equity and reason. The Principal/Owner will, in particular, before and during the Tender process, provide to all Bidder(s) the same information and will not provide to any Bidder(s) confidential / additional information through which the Bidder(s) could obtain an advantage in relation to the Tender process or the Contract execution.

(c) The Principal/Owner shall endeavour to exclude from the Tender process any person, whose conduct in the past has been of biased nature.

(2) If the Principal/Owner obtains information on the conduct of any of its employees which is a criminal offence under the Indian Penal code (IPC)/Prevention of Corruption Act, 1988 (PC Act) or is in violation of the principles herein mentioned or if there be a substantive suspicion in this regard, the Principal/Owner will inform the Chief Vigilance Officer and in addition can also initiate disciplinary actions as per its internal laid down policies and procedures.

Article 2: Commitment of the Bidder(s)/Contractor(s)

1. It is required that each Bidder/Contractor (including their respective officers, employees and agents) adhere to the highest ethical standards, and report to the Government / Department all suspected acts of fraud or corruption or Coercion or Collusion of which it has knowledge or becomes aware, during the tendering process and throughout the negotiation or award of a contract.

2. The Bidder(s)/Contractor(s) commits himself to take all measures necessary to prevent corruption. He commits himself to observe the following principles during his participation in the Tender process and during the Contract execution:

(a) The Bidder(s)/Contractor(s) will not, directly or through any other person or firm, offer, promise or give to any of the Principal/Owner's employees involved in the Tender process or execution of the Contract or to any third person any material or other benefit which he/she is not legally entitled to, in order to obtain in exchange any advantage of any kind whatsoever during the Tender process or during the execution of the Contract.

(b) The Bidder(s)/Contractor(s) will not enter with other Bidder(s) into any undisclosed agreement or understanding, whether formal or informal. This applies in particular to prices, specifications, certifications, subsidiary contracts, submission or non-submission of bids or any other actions to restrict competitiveness or to cartelize in the bidding process.

(c) The Bidder(s)/Contractor(s) will not commit any offence under the relevant IPC/PC Act. Further the Bidder(s)/ Contract(s) will not use improperly, (for the purpose of competition or personal gain), or pass on to others, any information or documents provided by the Principal/Owner as part of the business relationship, regarding plans, technical proposals and business details, including information contained or transmitted electronically.

(d) The Bidder(s)/Contractor(s) of foreign origin shall disclose the names and addresses of agents/ representatives in India, if any. Similarly Bidder(s)/Contractor(s) of Indian Nationality shall disclose names and addresses of foreign agents/representatives, if any. Either the Indian agent on behalf of the

foreign principal or the foreign principal directly could bid in a tender but not both. Further, in cases where an agent participate in a tender on behalf of one manufacturer, he shall not be allowed to quote on behalf of another manufacturer along with the first manufacturer in a subsequent/parallel tender for the same item.

(e) The Bidder(s)/Contractor(s) will, when presenting his bid, disclose any and all payments he has made, is committed to or intends to make to agents, brokers or any other intermediaries in connection with the award of the Contract.

3. The Bidder(s)/Contractor(s) will not instigate third persons to commit offences outlined above or be an accessory to such offences.
4. The Bidder(s)/Contractor(s) will not, directly or through any other person or firm indulge in fraudulent practice means a willful misrepresentation or omission of facts or submission of fake/forged documents in order to induce public official to act in reliance thereof, with the purpose of obtaining unjust advantage by or causing damage to justified interest of others and/or to influence the procurement process to the detriment of the Government interests.
5. The Bidder(s)/Contractor(s) will not, directly or through any other person or firm use Coercive Practices (means the act of obtaining something, compelling an action or influencing a decision through intimidation, threat or the use of force directly or indirectly, where potential or actual injury may befall upon a person, his/her reputation or property to influence their participation in the tendering process).

Article 3: Consequences of Breach

Without prejudice to any rights that may be available to the Principal/Owner under law or the Contract or its established policies and laid down procedures, the Principal/Owner shall have the following rights in case of breach of this Integrity Pact by the Bidder(s)/Contractor(s) and the Bidder/ Contractor accepts and undertakes to respect and uphold the Principal/Owner's absolute right:

1. If the Bidder(s)/Contractor(s), either before award or during execution of Contract has committed a transgression through a violation of Article 2 above or in any other form, such as to put his reliability or credibility in question, the Principal/Owner after giving 14 days notice to the contractor shall have powers to disqualify the Bidder(s)/Contractor(s) from the Tender process or terminate/determine the Contract, if already executed or exclude the Bidder/Contractor from future contract award processes. The imposition and duration of the exclusion will be determined by the severity of transgression and determined by the Principal/Owner. Such exclusion may be forever or for a limited period as decided by the Principal/Owner.
2. Forfeiture of EMD/Performance Guarantee/Security Deposit: If the Principal/Owner has disqualified the Bidder(s) from the Tender process prior to the award of the Contract or terminated/determined the Contract or has accrued the right to terminate/determine the Contract according to Article 3(1), the Principal/Owner apart from exercising any legal rights that may have accrued to the Principal/Owner, may in its considered opinion forfeit the entire amount of Earnest Money Deposit, Performance Guarantee and Security Deposit of the Bidder/Contractor.
3. Criminal Liability: If the Principal/Owner obtains knowledge of conduct of a Bidder or Contractor, or of an employee or a representative or an associate of a Bidder or Contractor which constitutes corruption within the meaning of IPC Act, or if the Principal/Owner has substantive suspicion in this regard, the Principal/Owner will inform the same to law enforcing agencies for further investigation.

Article 4: Previous Transgression

1. The Bidder declares that no previous transgressions occurred in the last 5 years with any other Company in any country confirming to the anticorruption approach or with Central Government or State Government or any other Central/State Public Sector Enterprises in India that could justify his exclusion from the Tender process.
2. If the Bidder makes incorrect statement on this subject, he can be disqualified from the Tender process or action can be taken for banning of business dealings/ holiday listing of the Bidder/Contractor as deemed fit by the Principal/ Owner.
3. If the Bidder/Contractor can prove that he has resorted / recouped the damage caused by him and has installed a suitable corruption prevention system, the Principal/Owner may, at its own discretion, revoke the exclusion prematurely.

Article 5: Equal Treatment of all Bidders/Contractors/Subcontractors

1. The Bidder(s)/Contractor(s) undertake(s) to demand from all subcontractors a commitment in conformity with this Integrity Pact. The Bidder/Contractor shall be responsible for any violation(s) of the principles laid down in this agreement/Pact by any of its Subcontractors/sub-vendors.
2. The Principal/Owner will enter into Pacts on identical terms as this one with all Bidders and Contractors.
3. The Principal/Owner will disqualify Bidders, who do not submit, the duly signed Pact between the Principal/ Owner and the bidder, along with the Tender or violate its provisions at any stage of the Tender process, from the Tender process.

Article 6- Duration of the Pact

This Pact begins when both the parties have legally signed it. It expires for the Contractor/Vendor 12 months after the completion of work under the contract or till the continuation of defect liability period, whichever is more and for all other bidders, till the Contract has been awarded.

If any claim is made/lodged during the time, the same shall be binding and continue to be valid despite the lapse of this Pacts as specified above, unless it is discharged/determined by the Competent Authority, CPWD.

Article 7- Other Provisions

1. This Pact is subject to Indian Law, place of performance and jurisdiction is the Head quarters of the Division of the Principal/Owner, who has floated the Tender.
2. Changes and supplements need to be made in writing. Side agreements have not been made.
3. If the Contractor is a partnership or a consortium, this Pact must be signed by all the partners or by one or more partner holding power of attorney signed by all partners and consortium members. In case of a Company, the Pact must be signed by a representative duly authorized by board resolution.
4. Should one or several provisions of this Pact turn out to be invalid; the remainder of this Pact remains valid. In this case, the parties will strive to come to an agreement to their original intensions.
5. It is agreed term and condition that any dispute or difference arising between the parties with regard to the terms of this Integrity Agreement / Pact, any action taken by the Owner/Principal in accordance with this Integrity Agreement/ Pact or interpretation thereof shall not be subject to arbitration.

Article 8- Legal and Prior Rights

All rights and remedies of the parties hereto shall be in addition to all the other legal rights and remedies belonging to such parties under the Contract and/or law and the same shall be deemed to be cumulative and not alternative to such legal rights and remedies aforesaid. For the sake of brevity, both the Parties agree that this Integrity Pact will have precedence over the Tender/Contact documents with regard any of the provisions covered under this Integrity Pact.

IN WITNESS WHEREOF the parties have signed and executed this Integrity Pact at the place and date first above mentioned in the presence of following witnesses:

.....

(For and on behalf of Principal/Owner)

.....

(For and on behalf of Bidder/Contractor)

WITNESSES:

1 .....

(signature, name and address)

2 .....

(signature, name and address)

Place:

Dated :

C.P.W.D. SAFETY CODE

1. Suitable scaffolds should be provided for workmen for all works that cannot safely be done from the ground, or from solid construction except such short period work as can be done safely from ladders. When a ladder is used, an extra mazdoor shall be engaged for holding the ladder and if the ladder is used for carrying materials as well suitable footholds and hand-hold shall be provided on the ladder and the ladder shall be given an inclination not steeper than ¼ to 1 (¼ horizontal and 1 vertical.)

2. Scaffolding of staging more than 3.6 m (12ft.) above the ground or floor, swung or suspended from an overhead support or erected with stationary support shall have a guard rail properly attached or bolted, braced and otherwise secured at least 90 cm. (3ft.) high above the floor or platform of such scaffolding or staging and extending along the entire length of the outside and ends there of with only such opening as may be necessary for the delivery of materials. Such scaffolding or staging shall be so fastened as to prevent it from swaying from the building or structure.

3. Working platforms, gangways and stairways should be so constructed that they should not sag unduly or unequally, and if the height of the platform or the gangway or the stairway is more than 3.6 m (12ft.) above ground level or floor level, they should be closely boarded, should have adequate width and should be suitably fastened as described in (2) above.

4. Every opening in the floor of a building or in a working platform shall be provided with suitable means to prevent the fall of person or materials by providing suitable fencing or railing whose minimum height shall be 90 cm. (3ft.)

5. Safe means of access shall be provided to all working platforms and other working places. Every ladder shall be securely fixed. No portable single ladder shall be over 9m. (30ft.) in length while the width between side rails in rung ladder shall in no case be less than 29 cm. (11½") for ladder upto and including 3 m. (10 ft.) in length. For longer ladders, this width should be increased at least ¼" for each additional 30 cm. (1 foot) of length. Uniform step spacing of not more than 30 cm shall be kept. Adequate precautions shall be taken to prevent danger from electrical equipment. No materials on any of the sites or work shall be so stacked or placed as to cause danger or inconvenience to any person or the public. The contractor shall provide all necessary fencing and lights to protect the public from accident and shall be bound to bear the expenses of defence of every suit, action or other proceedings at law that may be brought by any person for injury sustained owing to neglect of the above precautions and to pay any damages and cost which may be awarded in any such suit; action or proceedings to any such person or which may, with the consent of the contractor, be paid to compensate any claim by any such person.

6. (a) Excavation and Trenching - All trenches 1.2 m. (4ft.) or more in depth, shall at all times be supplied with at least one ladder for each 30 m. (100 ft.) in length or fraction thereof, Ladder shall extend from bottom of the trench to at least 90 cm. (3ft.) above the surface of the ground. The side of the trenches which are 1.5 m. (5ft.) or more in depth shall be stepped back to give suitable slope or securely held by timber bracing, so as to avoid the danger of sides collapsing. The excavated materials shall not be placed within 1.5 m. (5ft.) of the edges of the trench or half of the depth of the trench whichever is more. Cutting shall be done from top to bottom. Under no circumstances, undermining or undercutting shall be done.

   (b) Safety Measures for digging bore holes:-

   (i) If the bore well is successful, it should be safely capped to avoid caving and collapse of the bore well. The failed and the abandoned ones should be completely refilled to avoid caving and collapse;

   (ii) During drilling, Sign boards should be erected near the site with the address of the drilling contractor and the Engineer in-charge of the work;

   (iii) Suitable fencing should be erected around the well during the drilling and after the installation of the rig on the point of drilling, flags shall be put 50m alround the point of drilling to avoid entry of people;

(iv) After drilling the borewell, a cement platform (0.50m x 0.50m x 1.20m) 0.60m above ground level and 0.60m below ground level should be constructed around the well casing;

(v) After the completion of the borewell, the contractor should cap the bore well properly by welding steel plate, cover the bore well with the drilled wet soil and fix thorny shrubs over the soil. This should be done even while reparing the pump;

(vi) After the borewell is drilled the entire site should be brought to the ground level.

7. Demolition - Before any demolition work is commenced and also during the progress of the work,

(i) All roads and open areas adjacent to the work site shall either be closed or suitably protected.

(ii) No electric cable or apparatus which is liable to be a source of danger or a cable or apparatus used by the operator shall remain electrically charged.

(iii) All practical steps shall be taken to prevent danger to persons employed from risk of fire or explosion or flooding. No floor, roof or other part of the building shall be so overloaded with debris or materials as to render it unsafe.

8. All necessary personal safety equipment as considered adequate by the Engineer-in-Charge should be kept available for the use of the person employed on the site and maintained in a condition suitable for immediate use, and the contractor should take adequate steps to ensure proper use of equipment by those concerned:- The following safety equipment shall invariably be provided.

(i) Workers employed on mixing asphaltic materials, cement and lime mortars shall be provided with protective footwear and protective goggles.

(ii) Those engaged in white washing and mixing or stacking of cement bags or any material which is injurious to the eyes, shall be provided with protective goggles.

(iii) Those engaged in welding works shall be provided with welder's protective eyeshields.

(iv) Stone breaker shall be provided with protective goggles and protective clothing and seated at sufficiently safe intervals.

(v) When workers are employed in sewers and manholes, which are in active use, the contractors shall ensure that the manhole covers are opened and ventilated atleast for an hour before the workers are allowed to get into the manholes, and the manholes so opened shall be cordoned off with suitable railing and provided with warning signals or boards to prevent accident to the public. In addition, the contractor shall ensure that the following safety measure are adhered to :-

(a) Entry for workers into the line shall not be allowed except under supervision of the JE or any other higher officer.

(b) At least 5 to 6 manholes upstream and downstream should be kept open for at least 2 to 3 hours before any man is allowed to enter into the manhole for working inside.

(c) Before entry, presence of Toxic gases should be tested by inserting wet lead acetate paper which changes colour in the presence of such gases and gives indication of their presence.

(d) Presence of Oxygen should be verified by lowering a detector lamp into the manhole. In case, no Oxygen is found inside the sewer line, workers should be sent only with Oxygen kit.

(e) Safety belt with rope should be provided to the workers. While working inside the manholes, such rope should be handled by two men standing outside to enable him to be pulled out during emergency.

(f) The area should be barricaded or cordoned of by suitable means to avoid mishaps of any kind. Proper warning signs should be displayed for the safety of the public whenever cleaning works are undertaken during night or day.

(g) No smoking or open flames shall be allowed near the blocked manhole being cleaned.

(h) The malba obtained on account of cleaning of blocked manholes and sewer lines should be immediately removed to avoid accidents on account of slippery nature of the malba.

(i) Workers should not be allowed to work inside the manhole continuously. He should be given rest intermittently. The Engineer-in-Charge shall decide the time up to which a worker may be allowed to work continuously inside the manhole.

(j) Gas masks with Oxygen Cylinder should be kept at site for use in emergency.

(k) Air-blowers should be used for flow of fresh air through the manholes. Whenever called for, portable air blowers are recommended for ventilating the manholes. The Motors for these shall be vapour proof and of totally enclosed type. Non sparking gas engines also could be used but they should be placed at least 2 metres away from the opening and on the leeward side protected from wind so that they will not be a source of friction on any inflammable gas that might be present.

(l) The workers engaged for cleaning the manholes/sewers should be properly trained before allowing to work in the manhole.

(m) The workers shall be provided with Gumboots or non sparking shoes bump helmets and gloves non sparking tools safety lights and gas masks and portable air blowers (when necessary). They must be supplied with barrier cream for anointing the limbs before working inside the sewer lines.

(n) Workmen descending a manhole shall try each ladder stop or rung carefully before putting his full weight on it to guard against insecure fastening due to corrosion of the rung fixed to manhole well.

(o) If a man has received a physical injury, he should be brought out of the sewer immediately and adequate medical aid should be provided to him.

(p) The extent to which these precautions are to be taken depend on individual situation but the decision of the Engineer-in-Charge regarding the steps to be taken in this regard in an individual case will be final.

(vi) The Contractor shall not employ men and women below the age of 18 years on the work of painting with products containing lead in any form. Wherever men above the age of 18 are employed on the work of lead painting, the following precaution should be taken:-

(a) No paint containing lead or lead products shall be used except in the form of paste or ready made paint.

(b) Suitable face masks should be supplied for use by the workers when paint is applied in the form of spray or a surface having lead paint is dry rubbed and scrapped.

(c) Overalls shall be supplied by the contractors to the workmen and adequate facilities shall be provided to enable the working painters to wash during and on the cessation of work.

(vii) Workmen executing work on scaffolds or other structures above specified height shall be provided with full body harness and fall arresters.

9. An additional clause (viii)(i) of Central Public Works Department Safety Code (iv) the Contractor shall not employ women and men below the age of 18 on the work of painting with product containing lead in any form, wherever men above the age of 18 are employed on the work of lead painting, the following principles must be observed for such use :

(i) White lead, sulphate of lead or product containing these pigment, shall not be used in painting operation except in the form of pastes or paint ready for use.

(ii) Measures shall be taken, wherever required in order to prevent danger arising from the application of a paint in the form of spray.

(iii) Measures shall be taken, wherever practicable, to prevent danger arising out of from dust caused by dry rubbing down and scraping.

(iv) Adequate facilities shall be provided to enable working painters to wash during and on cessation of work.

(v) Overall shall be worn by working painters during the whole of working period.

(vi) Suitable arrangement shall be made to prevent clothing put off during working hours being spoiled13 by painting materials.

(vii) Cases of lead poisoning and suspected lead poisoning shall be notified and shall be subsequently verified by medical man appointed by competent authority of C.P.W.D PWD(DA).

(viii) C.P.W.D./PWD (DA) may require, when necessary medical examination of workers.

(ix) Instructions with regard to special hygienic precautions to be taken in the painting trade shall be distributed to working painters.

10. When the work is done near any place where there is risk of drowning, all necessary equipments should be provided and kept ready for use and all necessary steps taken for prompt rescue of any person in danger and adequate provision, should be made for prompt first aid treatment of all injuries likely to be obtained during the course of the work.

11. Use of hoisting machines and tackle including their attachments, anchorage and supports shall conform to the following standards or conditions :-

(i) (a) These shall be of good mechanical construction, sound materials and adequate strength and free from patent defects and shall be kept repaired and in good working order.

(b) Every rope used in hoisting or lowering materials or as a means of suspension shall be of durable quality and adequate strength, and free from patent defects.

(ii) Every crane driver or hoisting appliance operator, shall be properly qualified and no person under the age of 21 years should be in charge of any hoisting machine including any scaffolding winch or give signals to operator.

(iii) In case of every hoisting machine and of every chain ring hook, shackle swivel and pulley block used in hoisting or as means of suspension, the safe working load shall be ascertained by adequate means. Every hoisting machine and all gear referred to above shall be plainly marked with the safe working load. In case of a hoisting machine having a variable safe working load each safe working load and the condition under which it is applicable shall be clearly indicated. No part of any machine or any gear referred to above in this paragraph shall be loaded beyond the safe working load except for the purpose of testing.

(iv) In case of departmental machines, the safe working load shall be notified by the Electrical Engineer-in-Charge. As regards contractor's machines the contractors shall notify the safe working load of the machine to the Engineer-in-Charge whenever he brings any machinery to site of work and get it verified by the Electrical Engineer concerned.

12. Motors, gearing, transmission, electric wiring and other dangerous parts of hoisting appliances should be provided with efficient safeguards. Hoisting appliances should be provided with such means as will reduce to the minimum the risk of accidental descent of the load. Adequate precautions should be taken to reduce to the minimum the risk of any part of a suspended load becoming accidentally displaced. When workers are employed on electrical installations which are already energized, insulating mats, wearing apparel, such as gloves, sleeves and boots as may be necessary should be provided. The worker should not wear any rings, watches and carry keys or other materials which are good conductors of electricity.

13. All scaffolds, ladders and other safety devices mentioned or described herein shall be maintained in safe condition and no scaffold, ladder or equipment shall be altered or removed while it is in use. Adequate washing facilities should be provided at or near places of work.

14. These safety provisions should be brought to the notice of all concerned by display on a notice board at a prominent place at work spot. The person responsible for compliance of the safety code shall be named therein by the contractor.

15. To ensure effective enforcement of the rules and regulations relating to safety precautions the arrangements made by the contractor shall be open to inspection by the Labour Officer or Engineer-in-Charge of the department or their representatives.

16. Notwithstanding the above clauses from (1) to (15), there is nothing in these to exempt the contractor from the operations of any other Act or Rule in force in the Republic of India.

Model Rules for the Protection of Health and Sanitary Arrangements for Workers Employed by Central P.W.D. or its Contractors

1. APPLICATION

These rules shall apply to all buildings and construction works in charge of Central Public Works Department/ PWD (DA) in which twenty or more workers are ordinarily employed or are proposed to be employed in any day during the period during which the contract work is in progress.

2. DEFINITION

Work place means a place where twenty or more workers are ordinarily employed in connection with construction work on any day during the period during which the contract work is in progress.

3. FIRST-AID FACILITIES

(i) At every work place, there shall be provided and maintained, so as to be easily accessible during working hours, first-aid boxes at the rate of not less than one box for 150 contract labour or part thereof ordinarily employed.

(ii) The first-aid box shall be distinctly marked with a red cross on white back ground and shall contain the following equipment:-

(a) For work places in which the number of contract labour employed does not exceed 50- Each first-aid box shall contain the following equipments :-

1. 6 small sterilised dressings.
2. 3 medium size sterilised dressings.
3. 3 large size sterilised dressings.
4. 3 large sterilised burn dressings.
5. 1 (30 ml.) bottle containing a two per cent alcoholic solution of iodine.
6. 1 (30 ml.) bottle containing salvolatile having the dose and mode of administration indicated on the label.
7. 1 snakebite lancet.
8. 1 (30 gms.) bottle of potassium permanganate crystals.
9. 1 pair scissors.
10. 1 copy of the first-aid leaflet issued by the Director General, Factory Advice Service and Labour Institutes, Government of India.
11. 1 bottle containing 100 tablets (each of 5 gms.) of aspirin.
12. Ointment for burns.
13. A bottle of suitable surgical antiseptic solution.

(b) For work places in which the number of contract labour exceed 50.

Each first-aid box shall contain the following equipments.

1. 12 small sterilised dressings.
2. 6 medium size sterilised dressings.
3. 6 large size sterilised dressings.

4. 6 large size sterilised burn dressings.
5. 6 (15 gms.) packets sterilised cotton wool.
6. 1 (60 ml.) bottle containing a two per cent alcoholic solution iodine.
7. 1 (60 ml.) bottle containing salvolatile having the dose and mode of administration indicated on the label.
8. 1 roll of adhesive plaster.
9. 1 snake bite lancet.
10. 1 (30 gms.) bottle of potassium permanganate crystals.
11. 1 pair scissors.
12. 1 copy of the first-aid leaflet issued by the Director General Factory Advice Service and Labour Institutes /Government of India.
13. A bottle containing 100 tablets (each of 5 gms.) of aspirin.
14. Ointment for burns.
15. A bottle of suitable surgical antiseptic solution.

(iii) Adequate arrangements shall be made for immediate recoupment of the equipment when necessary.

(iv) Nothing except the prescribed contents shall be kept in the First-aid box.

(v) The first-aid box shall be kept in charge of a responsible person who shall always be readily available during the working hours of the work place.

(vi) A person in charge of the First-aid box shall be a person trained in First-aid treatment in the work places where the number of contract labour employed is 150 or more.

(vii) In work places where the number of contract labour employed is 500 or more and hospital facilities are not available within easy distance from the works. First-aid posts shall be established and run by a trained compounder. The compounder shall be on duty and shall be available at all hours when the workers are at work.

(viii) Where work places are situated in places which are not towns or cities, a suitable motor transport shall be kept readily available to carry injured person or person suddenly taken ill to the nearest hospital.

4. DRINKING WATER

(i) In every work place, there shall be provided and maintained at suitable places, easily accessible to labour, a sufficient supply of cold water fit for drinking.

(ii) Where drinking water is obtained from an Intermittent public water supply, each work place shall be provided with storage where such drinking water shall be stored.

(iii) Every water supply or storage shall be at a distance of not less than 50 feet from any latrine drain or other source of pollution. Where water has to be drawn from an existing well which is within such proximity of latrine, drain or any other source of pollution, the well shall be properly chlorinated before water is drawn from it for drinking. All such wells shall be entirely closed in and be provided with a trap door which shall be dust and waterproof.

(iv) A reliable pump shall be fitted to each covered well, the trap door shall be kept locked and opened only for cleaning or inspection which shall be done at least once a month.

5. WASHING FACILITIES

(i) In every work place adequate and suitable facilities for washing shall be provided and maintained for the use of contract labour employed therein.

(ii) Separate and adequate cleaning facilities shall be provided for the use of male and female workers.

(iii) Such facilities shall be conveniently accessible and shall be kept in clean and hygienic condition.

6. LATRINES AND URINALS

(i) Latrines shall be provided in every work place on the following scale namely :-

(a) Where female are employed, there shall be at least one latrine for every 25 females.

(b) Where males are employed, there shall be at least one latrine for every 25 males.

Provided that, where the number of males or females exceeds 100, it shall be sufficient if there is one latrine for 25 males or females as the case may be upto the first 100, and one for every 50 thereafter.

(ii) Every latrine shall be under cover and so partitioned off as to secure privacy, and shall have a proper door and fastenings.

(iii) Construction of latrines: The inside walls shall be constructed of masonry or some suitable heat-resisting nonabsorbent materials and shall be cement washed inside and outside at least once a year, Latrines shall not be of a standard lower than borehole system.

(iv) (a) Where workers of both sexes are employed, there shall be displayed outside each block of latrine and urinal, a notice in the language understood by the majority of the workers “For Men only” or “For Women Only” as the case may be.

(b) The notice shall also bear the figure of a man or of a woman, as the case may be.

(v) There shall be at least one urinal for male workers upto 50 and one for female workers upto fifty employed at a time, provided that where the number of male or female workmen, as the case may be exceeds 500, it shall be sufficient if there is one urinal for every 50 males or females upto the first 500 and one for every 100 or part thereafter.

(vi) (a) The latrines and urinals shall be adequately lighted and shall be maintained in a clean and sanitary condition at all times.

(b) Latrines and urinals other than those connected with a flush sewage system shall comply with the requirements of the Public Health Authorities.

(vii) Water shall be provided by means of tap or otherwise so as to be conveniently accessible in or near the latrines and urinals.

(viii) Disposal of excreta :- Unless otherwise arranged for by the local sanitary authority, arrangements for proper disposal of excreta by incineration at the work place shall be made by means of a suitable incinerator. Alternately excreta may be disposed of by putting a layer of night soil at the bottom of a pucca tank prepared for the purpose and covering it with a 15 cm. layer of waste or refuse and then covering it with a layer of earth for a fortnight (when it will turn to manure).

(ix) The contractor shall at his own expense, carry out all instructions issued to him by the Engineer-in-Charge to effect proper disposal of night soil and other conservancy work in respect of the contractor’s workmen or employees on the site. The contractor shall be responsible for payment of any charges which may be levied by Municipal or Cantonment Authority for execution of such on his behalf.

7. PROVISION OF SHELTER DURING REST

At every place there shall be provided, free of cost, four suitable sheds, two for meals and the other two for rest separately for the use of men and women labour. The height of each shelter shall not be less than 3 metres (10 ft.) from the floor level to the lowest part of the roof. These shall be kept clean and the space provided shall be on the basis of 0.6 sq.m. (6 sft) per head.

Provided that the Engineer-in-Charge may permit subject to his satisfaction, a portion of the building under construction or other alternative accommodation to be used for the purpose.

8. CRECHES

(i) At every work place, at which 20 or more women worker are ordinarily employed, there shall be provided two rooms of reasonable dimensions for the use of their children under the age of six years. One room shall be used as a play room for the children and the other as their bedroom. The rooms shall be constructed with specifications as per clause 19H (ii) a,b & c.

(ii) The rooms shall be provided with suitable and sufficient openings for light and ventilation. There shall be adequate provision of sweepers to keep the places clean.

(iii) The contractor shall supply adequate number of toys and games in the play room and sufficient number of cots and beddings in the bed room.

(iv) The contractor shall provide one ayaa to look after the children in the creche when the number of women workers does not exceed 50 and two when the number of women workers exceed 50.

(v) The use of the rooms earmarked as creches shall be restricted to children, their attendants and mothers of the children.

9. CANTEENS

(i) In every work place where the work regarding the employment of contract labour is likely to continue for six months and where in contract labour numbering one hundred or more are ordinarily employed, an adequate canteen shall be provided by the contractor for the use of such contract labour.

(ii) The canteen shall be maintained by the contractor in an efficient manner.

(iii) The canteen shall consist of at least a dining hall, kitchen, storeroom, pantry and washing places separately for workers and utensils.

(iv) The canteen shall be sufficiently lighted at all times when any person has access to it.

(v) The floor shall be made of smooth and impervious materials and inside walls shall be lime-washed or colour washed at least once in each year.

Provided that the inside walls of the kitchen shall be lime-washed every four months.

(vi) The premises of the canteen shall be maintained in a clean and sanitary condition.

(vii) Waste water shall be carried away in suitable covered drains and shall not be allowed to accumulate so as to cause a nuisance.

(viii) Suitable arrangements shall be made for the collection and disposal of garbage.

(ix) The dining hall shall accommodate at a time 30 per cent of the contract labour working at a time.

(x) The floor area of the dining hall, excluding the area occupied by the service counter and any furniture except tables and chairs shall not be less than one square metre (10 sft) per diner to be accommodated as prescribed in sub-Rule 9.

(xi) (a) A portion of the dining hall and service counter shall be partitioned off and reserved for women workers in proportion to their number.

(b) Washing places for women shall be separate and screened to secure privacy.

(xii) Sufficient tables stools, chair or benches shall be available for the number of diners to be accommodated as prescribed in sub-Rule 9.

(xiii) (a) 1. There shall be provided and maintained sufficient utensils crockery, furniture and any other equipments necessary for the efficient running of the canteen.

2. The furniture utensils and other equipment shall be maintained in a clean and hygienic condition.

(b) 1. Suitable clean clothes for the employees serving in the canteen shall be provided and maintained.

2. A service counter, if provided, shall have top of smooth and impervious material.

3. Suitable facilities including an adequate supply of hot water shall be provided for the cleaning of utensils and equipments.

(xiv) The food stuffs and other items to be served in the canteen shall be in conformity with the normal habits of the contract labour.

(xv) The charges for food stuffs, beverages and any other items served in the canteen shall be based on 'No profit, No loss' and shall be conspicuously displayed in the canteen.

(xvi) In arriving at the price of foodstuffs, and other article served in the canteen, the following items shall not be taken into consideration as expenditure namely:-

(a) The rent of land and building.

(b) The depreciation and maintenance charges for the building and equipments provided for the canteen.

(c) The cost of purchase, repairs and replacement of equipments including furniture, crockery, cutlery and utensils.

(d) The water charges and other charges incurred for lighting and ventilation.

(e) The interest and amounts spent on the provision and maintenance of equipments provided for the canteen.

(xvii) The accounts pertaining to the canteen shall be audited once every 12 months by registered accountants and auditors.

10. ANTI-MALARIAL PRECAUTIONS

The contractor shall at his own expense, conform to all anti-malarial instructions given to him by the Engineer-in-Charge including the filling up of any borrow pits which may have been dug by him.

11. The above rules shall be incorporated in the contracts and in notices inviting tenders and shall form an integral part of the contracts.

12. AMENDMENTS

Government may, from time to time, add to or amend these rules and issue directions - it may consider necessary for the purpose of removing any difficulty which may arise in the administration thereof.

C.P.W.D. Contractor's Labour Regulations

1. SHORT TITLE

These regulations may be called the C.P.W.D./PWD (DA) Contractors Labour Regulations.

2. DEFINITIONS

(i) Workman means any person employed by C.P.W.D./PWD (DA) or its contractor directly or indirectly through a subcontractor with or without the knowledge of the Central Public Works Department/PWD (DA) to do any skilled, semiskilled or unskilled manual, supervisory, technical or clerical work for hire or reward, whether the terms of employment are expressed or implied but does not include any person :-

(a) Who is employed mainly in a managerial or administrative capacity : or

(b) Who, being employed in a supervisory capacity draws wages exceeding five hundred rupees per mensem or exercises either by the nature of the duties attached to the office or by reason of powers vested in him, functions mainly of managerial nature: or

(c) Who is an out worker, that is to say, person to whom any article or materials are given out by or on behalf of the principal employers to be made up cleaned, washed, altered, ornamental finished, repaired adopted or otherwise processed for sale for the purpose of the trade or business of the principal employers and the process is to be carried out either in the home of the out worker or in some other premises, not being premises under the control and management of the principal employer.

No person below the age of 14 years shall be employed to act as a workman.

(ii) Fair Wages means wages whether for time or piece work fixed and notified under the provisions of the Minimum Wages Act from time to time.

(iii) Contractors shall include every person who undertakes to produce a given result other than a mere supply of goods or articles of manufacture through contract labour or who supplies contract labour for any work and includes a subcontractor.

(iv) Wages shall have the same meaning as defined in the Payment of Wages Act.

3. (i) Normally working hours of an adult employee should not exceed 9 hours a day. The working day shall be so arranged that inclusive of interval for rest, if any, it shall not spread over more than 12 hours on any day.

(ii) When an adult worker is made to work for more than 9 hours on any day or for more than 48 hours in any week, he shall be paid over time for the extra hours put in by him at double the ordinary rate of wages.

(iii) (a) Every worker shall be given a weekly holiday normally on a Sunday, in accordance with the provisions of the Minimum Wages (Central) Rules 1960 as amended from time to time irrespective of whether such worker is governed by the Minimum Wages Act or not.

(b) Where the minimum wages prescribed by the Government under the Minimum Wages Act are not inclusive of the wages for the weekly day of rest, the worker shall be entitled to rest day wages at the rate applicable to the next preceding day, provided he has worked under the same contractor for a continuous period of not less than 6 days.

(c) Where a contractor is permitted by the Engineer-in-Charge to allow a worker to work on a normal weekly holiday, he shall grant a substituted holiday to him for the whole day on one of the five days immediately before or after the normal weekly holiday and pay wages to such worker for the work performed on the normal weekly holiday at overtime rate.

4. DISPLAY OF NOTICE REGARDING WAGES ETC.

The contractor shall before he commences his work on contract, display and correctly maintain and continue to display and correctly maintain in a clear and legible condition in conspicuous places on the work, notices in English and in the local Indian languages spoken by the majority of the workers giving the minimum rates of wages fixed under Minimum Wages Act, the actual wages being paid, the hours of work for which such wage are earned, wages periods, dates of payments of wages and other relevant information as per Appendix 'III'.

5. PAYMENT OF WAGES

(i) The contractor shall fix wage periods in respect of which wages shall be payable.

(ii) No wage period shall exceed one month.

(iii) The wages of every person employed as contract labour in an establishment or by a contractor where less than one thousand such persons are employed shall be paid before the expiry of seventh day and in other cases before the expiry of tenth day after the last day of the wage period in respect of which the wages are payable.

(iv) Where the employment of any worker is terminated by or on behalf of the contractor the wages earned by him shall be paid before the expiry of the second working day from the date on which his employment is terminated.

(v) All payment of wages shall be made on a working day at the work premises and during the working time and on a date notified in advance and in case the work is completed before the expiry of the wage period, final payment shall be made within 48 hours of the last working day.

(vi) Wages due to every worker shall be paid to him direct by contractor through Bank or ECS or online transfer to his bank account.

(vii) All wages shall be paid through Bank or ECS or online transfer.

(viii) Wages shall be paid without any deductions of any kind except those specified by the Central Government by general or special order in this behalf or permissible under the Payment of Wages Act 1956.

(ix) A notice showing the wages period and the place and time of disbursement of wages shall be displayed at the place of work and a copy sent by the contractor to the Engineer-in-Charge under acknowledgment.

(x) It shall be the duty of the contractor to ensure the disbursement of wages through bank account of labour.

(xi) The contractor shall obtain from the Junior Engineer or any other authorised representative of the Engineer-in-Charge as the case may be, a certificate under his signature at the end of the entries in the "Register of Wages" or the "Wage-cum-Muster Roll" as the case may be in the following form:-

(xii) "Certified that the amount shown in column No ..... has been paid to the workman concerned through bank account of labour on ..... at……"

6. FINES AND DEDUCTIONS WHICH MAY BE MADE FROM WAGES

(i) The wages of a worker shall be paid to him without any deduction of any kind except the following:-

(a) Fines

(b) Deductions for absence from duty i.e. from the place or the places where by the terms of his employment he is required to work. The amount of deduction shall be in proportion to the period for which he was absent.

(c) Deduction for damage to or loss of goods expressly entrusted to the employed person for custody or for loss of money or any other deduction which he is required to account, where such damage or loss is directly attributable to his neglect or default.

(d) Deduction for recovery of advances or for adjustment of overpayment of wages, advances granted shall be entered in a register.

(e) Any other deduction which the Central Government may from time to time allow.

(ii) No fines should be imposed on any worker save in respect of such acts and omissions on his part as have been approved of by the Chief Labour Commissioner.

Note :- An approved list of Acts and Omissions for which fines can be imposed is enclosed at Appendix-X

(iii) No fine shall be imposed on a worker and no deduction for damage or loss shall be made from his wages until the worker has been given an opportunity of showing cause against such fines or deductions.

(iv) The total amount of fine which may be imposed in any one wage period on a worker shall not exceed an amount equal to three paise in a rupee of the total wages, payable to him in respect of that wage period.

(v) No fine imposed on any worker shall be recovered from him by instalment, or after the expiry of sixty days from the date on which it was imposed.

(vi) Every fine shall be deemed to have been imposed on the day of the act or omission in respect of which it was imposed.

7. **LABOUR RECORDS**

(i) The contractor shall maintain a Register of persons employed on work on contract in Form XIII of the CL (R&A) Central Rules 1971 (Appendix IV)

(ii) The contractor shall maintain a Muster Roll register in respect of all workmen employed by him on the work under Contract in Form XVI of the CL (R&A) Rules 1971 (Appendix V).

(iii) The contractor shall maintain a Wage Register in respect of all workmen employed by him on the work under contract in Form XVII of the CL (R&A) Rules 1971 (Appendix VI).

(iv) Register of accident - The contractor shall maintain a register of accidents in such form as may be convenient at the work place but the same shall include the following particulars:

(a) Full particulars of the labourers who met with accident.

(b) Rate of Wages.

(c) Sex

(d) Age

(e) Nature of accident and cause of accident.

(f) Time and date of accident.

(g) Date and time when admitted in Hospital,

(h) Date of discharge from the Hospital.

(i) Period of treatment and result of treatment.

(j) Percentage of loss of earning capacity and disability as assessed by Medical Officer.

(k) Claim required to be paid under Workmen's Compensation Act.

(l) Date of payment of compensation.

(m) Amount paid with details of the person to whom the same was paid.

(n) Authority by whom the compensation was assessed.

(o) Remarks

(v) The contractor shall maintain a Register of Fines in the Form XII of the CL (R&A) Rules 1971 (Appendix-XI)

The contractor shall display in a good condition and in a conspicuous place of work the approved list of acts and omissions for which fines can be imposed (Appendix-X)

(vi) The contractor shall maintain a Register of deductions for damage or loss in Form XX of the CL (R&A) Rules 1971 (Appendix-XII)

(vii) The contractor shall maintain a Register of Advances in Form XXIII of the CL (R&A) Rules 1971 (Appendix-XIII)

(viii) The contractor shall maintain a Register of Overtime in Form XXIII of the CL (R&A) Rules 1971 (Appendix-XIV)

6. ATTENDANCE CARD-CUM-WAGE SLIP

(i) The contractor shall issue an Attendance card-cum-wage slip to each workman employed by him in the specimen form at (Appendix-VII)

(ii) The card shall be valid for each wage period.

(iii) The contractor shall mark the attendance of each workman on the card twice each day, once at the commencement of the day and again after the rest interval, before he actually starts work.

(iv) The card shall remain in possession of the worker during the wage period under reference.

(v) The contractor shall complete the wage slip portion on the reverse of the card at least a day prior to the disbursement of wages in respect of the wage period under reference.

(vi) The contractor shall obtain the signature or thumb impression of the worker on the wage slip at the time of disbursement of wages and retain the card with himself.

9. EMPLOYMENT CARD

The contractor shall issue an Employment Card in Form XIV of the CL (R&A) Central Rules 1971 to each worker within three days of the employment of the worker (Appendix-VIII).

10. SERVICE CERTIFICATE

On termination of employment for any reason whatsoever the contractor shall issue to the workman whose services have been terminated, a Service certificate in Form XV of the CL (R&A) Central Rules 1971 (Appendix-IX)

11. PRESERVATION OF LABOUR RECORDS

All records required to be maintained under Regulations Nos. 6 & 7 shall be preserved in original for a period of three years from the date of last entries made in them and shall be made available for inspection by the Engineer-in-Charge or Labour Officer or any other officers authorised by the Ministry of Urban Development in this behalf.

12. POWER OF LABOUR OFFICER TO MAKE INVESTIGATIONS OR ENQUIRY

The Labour Officer or any person authorised by Central Government on their behalf shall have power to make enquires with a view to ascertaining and enforcing due and proper observance of Fair Wage Clauses and the Provisions of these Regulations. He shall investigate into any complaint regarding the default made by the contractor or subcontractor in regard to such provision.

13. REPORT OF LABOUR OFFICER

The Labour Officer or other persons authorised as aforesaid shall submit a report of result of his investigation or enquiry to the Executive Engineer concerned indicating the extent, if any, to which the default has been committed with a note that necessary deductions from the contractor's bill be made and the wages and other dues be paid to the labourers concerned. In case an appeal is made by the contractor under Clause 13 of these regulations, actual payment to labourers will be made by the Executive Engineer after the Superintending Engineer has given his decision on such appeal.

(i) The Executive Engineer shall arrange payments to the labour concerned within 45 days from the receipt of the report form the Labour Officer or the Superintending Engineer as the case may be.

14. APPEAL AGAINST THE DECISION OF LABOUR OFFICER

Any person aggrieved by the decision and recommendations of the Labour Officer or other person so authorised may appeal against such decision to the Superintending Engineer concerned within 30 days from the date of decision, forwarding simultaneously a copy of his appeal to the Executive Engineer concerned but subject to such appeal, the decision of the officer shall be final and binding upon the contractor.

15. PROHIBITION REGARDING REPRESENTATION THROUGH LAWYER

(i) A workman shall be entitled to be represented in any investigation or enquiry under these regulations by:-

(a) An officer of a registered trade union of which he is a member.

(b) An officer of a federation of trade unions to which the trade union referred to in clause (a) is affiliated.

(c) Where the employer is not a member of any registered trade union, by an officer of a registered trade union, connected with the industry in which the worker is employed or by any other workman employed in the industry in which the worker is employed.

(ii) An employer shall be entitled to be represented in any investigation or enquiry under these regulations by :-

(a) An officer of an association of employers of which he is a member.

(b) An officer of a federation of associations of employers to which association referred to in clause (a) is affiliated.

(c) Where the employers is not a member of any association of employers, by an officer of association of employer connected with the industry in which the employer is engaged or by any other employer, engaged in the industry in which the employer is engaged.

(iii) No party shall be entitled to be represented by a legal practitioner in any investigation or enquiry under these regulations.

16. INSPECTION OF BOOKS AND SLIPS

The contractor shall allow inspection of all the prescribed labour records to any of his workers or to his agent at a convenient time and place after due notice is received or to the Labour Officer or any other person, authorised by the Central Government on his behalf.

17. SUBMISSIONS OF RETURNS

The contractor shall submit periodical returns as may be specified from time to time.

18. AMENDMENTS

The Central Government may from time to time add to or amend the regulations and on any question as to the application/Interpretation or effect of those regulations the decision of the Superintending Engineer concerned shall be final.

परिशिष्ट / Appendix 'I'

प्रसूति प्रसुविधाओं का रजिस्टर (ठेके की शर्तो का खण्ड 19–च)

REGISTER OF MATERNITY BENEFITS (Clause 19 F)

ठेकेदार का नाम और पता
Name and address of the contractor.....
कार्य का नाम और स्थिति
Name and location of the work.....

कर्मचारी का नाम Name of the employee	पिता / पति का नाम Father's/ husband's name	नियोजन का स्वरूप Nature of employment	वास्तविक नियुक्ति की अवधि Period of actual employment	तारीख जिसको प्रसवावस्था की सूचना दी गई Date on which notice of confinement given
1	2	3	4	5

तारीख जिसको प्रसूति छुट्टी प्रारम्भ हुई और समाप्त हुई
Date on which maternity leave commenced and ended

प्रसव / गर्भपात की तारीख Date of delivery/ miscarriage	प्रसव की दशा में In case of delivery		गर्भपात की दशा में In case of miscarriage	
	प्रारम्भ हुई commenced	समाप्त हुई Ended	प्रारम्भ हुई Commenced	समाप्त हुई Ended
6	7	8	9	10

कर्मचारी को संदत्त छुट्टी वेतन
Leave pay paid to the employee

प्रसव की दशा में In case of delivery		गर्भपात की दशा में In case of miscarriage		टिप्पणियां Remarks
छुट्टी वेतन की दर Rate of leave pay	संदत्त रकम Amount paid	छुट्टी वेतन की दर Rate of leave pay	संदत्त रकम Amount paid	
11	12	13	14	15

परिशिष्ट / Appendix 'II'

केन्द्रीय लोक निर्माण विभाग संकर्मो में ठेकेदारों के श्रमिकों को अनुज्ञेय प्रसूति प्रसुविधा के बारे में रजिस्टर का नमूना प्रारूपं

SPECIMEN FORM OF THE REGISTER, REGARDING MATERNITY BENEFIT ADMISSIBLE TO THE CONTRACTOR'S LABOUR IN CENTRAL PUBLIC WORKS DEPARTMENT WORKS.

ठेकेदार का नाम और पता
Name and address of the contractor.....
कार्य का नाम और स्थिति
Name and location of the work.....

1. स्त्री का नाम और उसके पति का नाम
   Name of the woman and her husband's name.
2. पद नाम
   Designation.
3. नियुक्ति की तारीख
   Date of appointment.
4. मास और वर्षो सहित वह तारीख जिसको उसे नियुक्त किया गया
   Date with months and years in which she is employed.
5. सेवान्मुक्त / पदच्युत किये जाने की तारीख, यदि कोई हो
   Date of discharge/dismissal, if any.
6. गर्भ धारण के बाबत प्रमाण पत्र पेश किए जाने की तारीख
   Date of production of certificates in respect of pregnancy.
7. वह तारीख जिसको स्त्री प्रत्याशित प्रसव के बारे में इत्तिला देती है
   Date on which the woman informs about the expected delivery.
8. प्रसव / गर्भपात / मृत्यु होने की तारीख
   Date of delivery/miscarriage/death
9. प्रसव / गर्भपात / संबंधी प्रमाण पत्र किये जाने की तारीख
   Date of production of certificate in respect of delivery/miscarriage.
10. प्रत्याशित प्रसव से पूर्व संदत्त प्रसूति / मृत्यु प्रसुविधा की रकम और उसकी तारीख
    Date with the amount of maternity/death benefit paid in advance of expected delivery.
11. प्रसूति प्रसुविधा के पश्चातवर्ती संदाय की रकम और उसकी तारीख
    Date with amount of subsequent payment of maternity benefit.
12. स्त्री के मृत्यु के बाद उसकी प्रसूति प्रसुविधा का संदाय प्राप्त करने के लिए उस स्त्री द्वारा नाम निर्देशित व्यक्ति का नाम
    Name of the person nominated by the woman to receive the payment of the maternity benefit after her death.
13. यदि महिला की मृत्यु हो जाती है तो उसकी मृत्यु की तारीख, उस व्यक्ति का नाम, जिसको प्रसूति प्रसुविधा की रकम संदत्त की गई, संदाय की तारीख और मास
    If the woman dies, the date of her death, the name of the person to whom maternity benefit amount was paid, the month thereof and the date of payment.
14. रजिस्टर की प्रविष्टियों को अधिप्रमाणित करते हुए ठेकेदार के हस्ताक्षर
    Signature of the contractor authenticating entries in the register.
15. निरीक्षक आफिसर के उपयोग के लिए टिप्पणी स्तम्भ
    Remarks column for the use of Inspecting Officer.

परिशिष्ट / Appendix 'III'

श्रम बोर्ड
Labour Board

कार्य का नाम.....

Name of work

ठेकेदार का नाम.....

Name of Contractor

ठेकेदार का पता.....

Address of Contractor

के0 लो0 नि0 विभाग के मंडल का नाम व पता.....

Name and address of C.P.W.D. Division

के॰ लो॰ नि॰ विभाग के श्रम अधिकारी का नाम .....

Name of C.P.W.D. Labour Officer

के॰ लो॰ नि॰ विभाग के श्रम अधिकारी का पता.....

Address of C.P.W.D. Labour Officer

श्रम कार्यान्वयन अधिकारी का नाम .....

Name of Labour Enforcement Officer

श्रम कार्यान्वयन अधिकारी का पता .....

Address of Labour Enforcement Officer

क्रम संख्या Sl. No.	श्रेणी Category	न्युनतम निर्धारित मजदूरी Minimum wage fixed	भुगतान की गई वास्तविक मजदूरी Actual wage paid	वर्तमान संख्या Number present	टिप्पणी Remarks

साप्ताहिक छुट्टी .....

Weekly holiday

मजदूरी की अवधि.....

Wage period

मजदूरी के भुगतान की तारीख .....

Date of payment of wages

काम के घंटे.....

Working hours

आराम का मध्यान्तर.....

Rest interval

फार्म 13 Form-XIII (कृप्या नियम 75 देखें) (See Rule 75)

ठेकेदार द्वारा लगाये गए मजदूरों का रजिस्टर Register of Workmen Employed by Contractor

ठेकेदार का नाम व पता.....
Name and address of contractor

कार्यालय का नाम व पता जिसके अधीन ठेका चल रहा है .....
Name and address of establishment under which contract is carried on

कार्य का स्वरूप व स्थान .....
Nature and location of work

मुख्य नियोक्ता का नाम व पता .....
Name and address of Principal Employer

क्र. संख्या Sl. No	मजदूर का नाम Name and Surname of workman	आयु तथा लिंग Age and Sex	पिता/पति का नाम Father's/Husband's name	कार्य का स्वरूप/ पद का नाम Nature of employment/ designation	मजदूर का स्थायी गृह पता (गांव व तहसील ताल्लुक और जिला) Permanent home address of the workman (Village and Tehsil, Taluk and District)	स्थानीय पता Local address	नौकरी आरम्भ होने की तारीख Date of commence-ment of employment	मजदूर के हस्तक्षार/अंगूठे का निशान Signature or thumb impression of the workman	नौकरी से बरखास्त करने की तारीख Date of termination of employment	बरखास्त करने के कारण Reasons for terminations	टिप्पणी Remarks
1	2	3	4	5	6	7	8	9	10	11	12

फार्म 16 Form-XVI (कृपया नियम 78 (2)(क) देखें) (See Rule 78(2)(a))

मस्टर रोल Muster Roll

ठेकेदार का नाम व पता.....
Name and address of contractor

कार्यालय का नाम और पता जिसके अधीन ठेका चल रहा है .....
Name and address of establishment under which contract is carried on

कार्य का स्वरूप व स्थान.....
Nature and location of work

मुख्य नियोक्ता का नाम व पता..... महीने पक्ष के लिए.....
Name and address of Principal Employer. For the Month of fortnight

क्र. संख्या Sl. No	मजदूर का नाम Name of Workman	लिंग Sex	पिता/पति का नाम Father's/Husband's name	दिनांक Dates					टिप्पणी Remarks
1	2	3	4	5					6
				1	2	3	4	5	

फार्म 17 Form-XVII (कृपया नियम 78 (2)(क) देखें) (See Rule 78(2)(a))

मजदूरी रजिस्टर Register of wages

ठेकेदार का नाम व पता.....
Name and address of contractor

कार्यालय का नाम व पता जिसके अधीन ठेका चल रहा है .....
Name and address of establishment under which contract is carried on

कार्य का स्वरूप व स्थान.....
Nature and location of work

मुख्य नियोक्ता का नाम व पता..... मजदूरी की अवधिः मासिक या पाक्षिक
Name and address of Principal Employer..... wages Period: Monthly/Fortnight

क्र. संख्या Sl. No.	मजदूर का नाम Name of workman	मजदूरो के रजिस्टर में क्रम संख्या Serial No. in the register of workman	किए गए कार्य का स्वरूप/ पदनाम Designation/ nature of work done	जितनें दिन कार्य किया No. of days worked	किए गए कार्य के एकक Units of work done	मजदूरी की दर/पीस रेट Daily rate of wages/ piece rate	की गई मजदूरी की रकम Amount of wages earned					वसूली, यदि कोई हो (वसूली का स्वरूप लिखें Deductions if any (indicate nature)	भुगतान की गई शुद्ध राशि Net amount paid	मजदूर के हस्ताक्षर/ अंगूठे का निशान Signature or thumb impression of the workman	ठेकेदार अथवा उसके प्रतिनिधि के हस्ताक्षर Initial of contractor or his representative
							मूल मजदूरी Basic wages	महगाई भत्ता Dearness allowances	समयोपरि भत्ता Overtime	अन्य नकद भुगतान (भुगतान के स्वरूप लिखें Other cash payments (Indicate nature)	जोड़ Total				
1	2	3	4	5	6	7	8	9	10	11	12	13	14	15	16

मजदूरी कार्ड संख्या / Wage Card No.....

मजदूरी कार्ड Wage Card

ठेकेदार का नाम व पता.....जारी करने की तारीख .....
Name and address of contractor Date of Issue

कार्य का नाम व स्थान .....पद.....
Name and location of work Designation

मजदूर का नाम.....मास / पक्ष.....
Name of workman Month/Fortnight

मजदूरी की दर.....
Rate of Wages

	1	2	3	4	5	6	7	8	9	10	11	12	13	14	15	16	17	18	19	20	21	22	23	24	25	26	27	28	29	30	31
प्रातः Morning																														दर Rate	
सायं Evening																														रकम Amount	
हस्ताक्षर Initial																															

.....से अपनी मजदूरी के.....रूपये प्राप्त किए
Received from the sum of Rs. on account of my wages

यह मजदूरी कार्ड जारी होने की तारीख से एक मास तक के लिए वैद्य है। हस्ताक्षर Signature.
The Wage Card is valid for one month from the date of issue

परिशिष्ट / Appendix 'VII'
(सीधी तरफ / Obverse)

फार्म 19/Form-XIX

(कृप्या नियम 78(2)(ख) देखें)
[See rule 78 (2)(b)]

मजदूरी कार्ड
Wages Slip

ठेकेदार का नाम व पता
Name and address of contractor.....

मजदूर का नाम तथा उसके पिता / पति का नाम
Name and Father's/Husband's name of workman.....

कार्य का स्वरूप तथा स्थान का नाम
Nature and location of work.....

सप्ताह / पक्ष / मास के लिए
For the Week/Fortnight/Month ending.....

1. जितने दिन कार्य किया
   No. of days worked.....
2. किए गए कार्य के एककों की संख्या (पीस रेट मजदूरों के बारे में)
   No. of units worked in case of piece rate workers.....
3. दैनिक मजदूरी की दर / पीस रेट
   Rate of dailly wages/piece rate .....
4. समयोपरि मजदूरी की रकम
   Amount of overtime wages.....
5. दी जाने वाली कुल रकम
   Gross wages payable.....
6. वसूलियां, यदि कोई हो
   Deduction, if any.....
7. दी गई मजदूरी की शुद्ध रकम
   Net amount of wages paid.....

ठेकेदार अथवा उसके प्रतिनिधि के हस्ताक्षर
Initials of the contractor or his representative

फार्म 14 / Form-XIV
(कृप्या नियम 76 देख)
[See rule 76]

रोजगार कार्ड
Employment Card

ठेकेदार का नाम व पता
Name and address of contractor----------

कार्यालय का नाम व पता जिसके अधीन ठेका चल रहा है
Name and address of establishment under which contract is carried on----------

कार्य का नाम व स्थान
Name of work and location of work----------

मुख्य नियोक्ता का नाम व पता
Name and address of Principal Employer----------

1. मजदूर का नाम
   Name of the workman----------
2. लगाये गए मजदूरों के रजिस्टर में क्रम संख्या
   SI. No. in the register of workman employed----------
3. रोजगार / पद का नाम
   Nature of employment/designation----------
4. मजदूरी की दर
   (पीस वर्क के बारें में एकक के ब्यौरा सहित)
   Wage rate (with particulars of unit in case of piece work)----------
5. मजदूरी की अवधि
   Wage period----------
6. रोजगार की अवधि
   Tenure of employment----------
7. टिप्पणी
   Remarks----------

ठेकेदार के हस्ताक्षर
Signature of contractor

फार्म 15 Form-XV (कृपया नियम 77 देखें) (See Rule 77)

सेवा प्रमाणपत्र Service Certificate

ठेकेदार का नाम व पता.....
Name and address of contractor

कार्य का स्वरूप तथा स्थान.....
Nature and location of work

मजदूर का नाम व पता.....
Name and address of workman

आयु अथवा जन्म तिथि.....
Age or date of birth

पहचान चिन्ह .....
Indentification marks

पिता / पति का नाम.....
Father's/Husband's name

कार्यालय का नाम व पता जिसके अधीन ठेका चल रहा है.....
Name and address of establishment in under which contract is carried on

मुख्य नियोक्ता का नाम और पता.....
Name and address of Principal Employer

क्र. संख्या Sl. No	रोजगार की कुल अवधि Total Period for which employed		किए गए कार्य का स्वरूप Nature of Work Done	मजदूरी दर (पीस वर्क के मामलें में एकक के ब्योरों सहित) Rate of wages (with particulars of unit in case of piece work)	टिप्पणी Remarks
	से From	तक To			
1	2	3	4	5	6

हस्ताक्षर / Signature

LIST OF ACTS AND OMISSONS FOR WHICH FINES CAN BE IMPOSED
ऐसे कार्यों तथा भूलों की सूची जिसके लिए जुर्माने किये जा सकते हैं

केन्द्रीय लोक निर्माण विभाग ठेकेदार श्रमिक विनियमो के नियम 7 (v) के अनुसार कार्य स्थल पर अंग्रेजी तथा स्थानीय भाषा दोनों में अच्छी तथा स्थानीय भाषा दोनों में अच्छी प्रकार से प्रदर्शित किया जाना।

1. जान बूझ कर अकेले या अन्य के साथ मिल कर अवज्ञा या उल्लंघन।
2. केन्द्रीय लोक निर्माण विभाग के कार्य या सम्पत्ति के अतिरिक्त, ठेकों के संबंध मे चोरी धोखाबाजी, बेईमानी करना।
3. घूस या अन्य गैरकानूनी परितोषण लेना या देना।
4. नित्य देर से काम पर आना।
5. शराब पीकर लड़ना, उपद्रवी या बेढंगा या अन्यमनस्क व्यवहार।
6. नित्य लापरवाही।
7. उस क्षेत्रों के आस–पास बीड़ी–सिग्रेट पीना जहां आग पकड़ने वाली या अन्य सामग्री रखी हो।
8. नित्य अनुशासनहीनता।
9. चालू कार्य में अथवा के. लो. नि. वि. या ठेकेदार की संपत्ति को क्षति पहुंचाना।
10. ड्युटी पर सोना।
11. कामचोरी या कार्य को धीरे करना।
12. नाम, आयु, पिता के नाम आदि के बारे में गलत सूचना देना।
13. नियोक्ता द्वारा दिये गये मजदूरी कार्ड को नित्य खो देना।
14. मालिक की उत्पादन की सम्पत्ति का अनधिकृत उपयोग या कार्यस्थल पर अनाधिकृत वस्तुएं बनाना।
15. कुशल कामगारों द्वारा निर्माण तथा अनुरक्षण में अकुशल कारीगरी दिखाना जिसे विभाग स्वीकार नहीं करता जिसके संशोधन के लिये ठेकेदार को बाध्य किया जाता है।
16. गलत शिकायतें लगाना और / या भ्रामक विवरण देना।
17. स्थापनाओं के परिसर के भीतर कोई व्यापार चलाना।
18. कर्मचारियों का अनधिकृत व्यापार कार्य करना।
19. स्थापना के परिसर के भीतर किसी प्रकार का धन एकत्र करना या उसके लिए प्रचार करना जब तक कि मालिक द्वारा अधिकार न दिया गया हो ।

In accordance with rule 7(v) of the CPWD Contractor's Labour Regulations to be displayed prominently at the site of work both in English and local Language.

1. Wilful insubordination or disobidience, whether alone or in combination with other.
2. Theft fraud or dishonesty in connection with the contractors beside a business or property of CPWD.
3. Taking or giving bribes or any illegal gratifications
4. Habitual late attendance.
5. Drunkenness lighting, riotous or disorderly or indifferent behaviour
6. Habitual negligence.
7. Smoking near or around the area where combustible or other materials are locked
8. Habitual indiscipline.
9. Causing damage to work in the progress or to property of the CPWD or of the contractor.
10. Sleeping on duty.
11. Malingering or slowing down work.
12. Giving of false information regarding name, age father's name, etc.
13. Habitual loss of wage cards supplied by the employers.
14. Unauthorised use of employer's property of manufacturing or making of unauthorised particles at the work place.
15. Bad workmanship in construction and maintenance by skilled workers which is not approved by the Department and for which the contractors are compelled to undertake rectifications.
16. Making false complaints and/or misleading statements.
17. Engaging on trade within the premises of the establishments.
18. Any unauthorised divulgence of business affairs of the employees.
19. Collection or canvassing for the collection of any money within the premises of an establishment unless authorised by the employer.

20. मालिकों की पूर्व अनुमति के बिना परिसर के भीतर बैठकें बुलाना।

21. परिसर के भीतर कार्य समय के दौरान किसी कामगार या कर्मचारी को डराना या धमकाना।

20. Holding meeting inside the premises without previous sanction of the employers.

21. Threatening or intimidating any workman or employer during the working hours within the premises.

फार्म 12 Form-XII (कृपया नियम 78(2)घ) देखें) (See Rule 78(2) (d))

जुर्मानों का रजिस्टर Register of Fines

ठेकेदार का नाम व पता .....
Name and address of contractor

कार्यालय का नाम व पता जिसके अधीन ठेका चल रहा है .....
Name and address of establishment in under which contract is carreid on

कार्य का स्वरूप व स्थान .....
Nature and location of work

मुख्य नियोक्ता का नाम व पता .....
Name and address of Principal Employer

क्र. संख्या Sl. No.	मजदूर का नाम Name of workman	पिता/पति का नाम Father's/ Husband's name	नौकरी का स्वरूप/ पदनाम Designation/ nature of employment	वह कार्य/भूल जिसके लिए जुर्माना लगाया गया Act/Omission for which fine imposed	अपराध की तारीख Date of Offence	क्या कर्मकार ने इस जुर्माने के विरुद्ध कोई कारण बताया है Whether workman showed cause against fine	उस व्यक्ति का नाम जिसकी उपस्थिति में कर्मचारी की व्याख्या सुनी गई Name of person in whose presence employee's explanation was heard	मजदूरी की अवधि तथा देय मजदूरी Wage period and wages payable	जुर्माना की गई राशि Amount of fine imposed	जुर्माना जिस तिथि को समाप्त हुआ Date on which fine realised	टिप्पणी Remarks
1	2	3	4	5	6	7	8	9	10	11	12

परिशिष्ट / Appendix 'XII'

फार्म 20 Form-XX (कृपया नियम 78(2)घ) देखें) (See Rule 78(2) (d))

क्षति / हानि के लिए कटौती का रजिस्टर Register of Deduction for Damage or Loss

ठेकेदार का नाम व पता .....
Name and address of contractor

कार्यालय का नाम व पता जिसके अधीन ठेका चल रहा है .....
Name and address of establishment in under which contract is carreid on

कार्य का स्वरूप व स्थान .....
Nature and location of work

मुख्य नियोक्ता का नाम व पता .....
Name and address of Principal Employer

क्र. सख्या Sl.N.	मजदूर का नाम Name of Workman	पिता / पति का नाम Father's/Husbasnd name	नौकरी का स्वरूप / पदनाम Designation/ nature of employment	क्षति अथवा हानि का ब्यौरा Particulars of damage or loss	क्षति अथवा हानि की तारीख Date of damage or loss	क्या कर्मकार ने इस कटौती के विरुद्ध कोई कारण बताया है Whether workman showed cause against deduction	उस व्यक्ति का नाम जिसकी उपस्थिति में कर्मचारी की व्याख्या सुनी गई name of person in whose presence employee's explanation was heard	लगाई गई कटौती की राशि Amount of deduction imposed	किश्तों की संख्या No.of installments	वसूली की तिथि Date of recovery		टिप्पणी Remarking
										प्रथम किश्त First install-ment	अंतिम किश्त Last install-ment	
1	2	3	4	5	6	7	8	9	10	11	12	13

फार्म 22 Form-XXII (कृपया नियम 78(2)घ) देखें) (See Rule 78(2) (d))

अग्रिम का रजिस्टर Register of Advances

ठेकेदार का नाम व पता .....
Name and address of contractor

कार्यालय का नाम व पता जिसके अधीन ठेका चल रहा है .....
Name and address of establishment in under which contract is carreid on

कार्य का स्वरूप व स्थान .....
Nature and location of work

मुख्य नियोक्ता का नाम व पता .....
Name and address of Principal Employer

क्र. संख्या Sl. No.	मजदूर का नाम Name of workman	पिता/पति का नाम Father's/ Husband name	नौकरी का स्वरूप/ पदनाम Designation/ nature of employment	मजदूरी की अवधि तथा देय मजदूरी Wage Period and wages payable	दिए गए अग्रिम की तिथि तथा राशि Date and amount of advance given	वह प्रयोजन जिसके लिए अग्रिम दिया गया Purpose(s) for which advance made	किश्तो की संख्या जिनके द्वारा अग्रिम लौटाया जाना है Number of installments by which advance to be repaid	लौटाई गई प्रत्येक किश्त की तिथि तथा राशि Date and amount of each installment repaid	वह तिथि जबकि अन्तिम किश्त लौटाई गई Date and which last installment was repaid	टिप्पणी Remarks
1	2	3	4	5	6	7	8	9	10	11

फार्म 23 Form-XXIII (कृपया नियम 78(2)(च) देखें) (See Rule 78(2) (e))

समयोपरि रजिस्टर Register of Overtime

ठेकेदार का नाम व पता .....
Name and address of contractor

कार्यालय का नाम व पता जिसके अधीन ठेका चल रहा है .....
Name and address of establishment in under which contract is carreid on

कार्य का स्वरूप व स्थान .....
Nature and location of work

मुख्य नियोक्ता का नाम व पता .....
Name and address of Principal Employer

क्र. संख्या Sl. No.	मजदूर का नाम Name of Workman	पिता/पति का नाम Father's/ Husband's name	लिंग Sex	नौकरी का स्वरूप/ पदनाम Designation/ nature of employement	जिन तारीखों को समयोपरि कार्य किया Date on which Overtime worked	कुल समयोपरि कार्य अथवा पीस रेट के मामले मे उत्पादन Total overtime worked or production in case of piece rated	मजदूरी की सामान्य दर Normal rate of wages	समयोपरि मजदूरी की दर Overtime rate of wages	समयोपरि कमाई Overtime earning	जिस दर पर समयोपरि मजदूरी दी Rate on which overtime paid	टिप्पणी Remarks
1	2	3	4	5	6	7	8	9	10	11	12

Appendix - XV
(FORM 31)
INDENTURE FOR SECURED ADVANCES
(Referred to in paragraphs 10.2.20 and 10.2.22 of CPW A Code)

(For use in cases in which the contract is for finished work and the contractor has entered into an agreement for the execution of a certain specified quantity of work in a given time)

THIS INDENTURE made the…… day of ……..20……. BETWEEN …… (hereinafter called the Contractor which expression shall where the context so admits or implies be deemed to include his executors administrators and assigns) of the one part and the PRESIDENT OF INDIA (hereinafter called the President which expression shall where the context so admits or implies be deemed to include his successors in office and assigns) of the other part.

WHEREAS by an agreement dated…….. (hereinafter called the said agreement) the Contractor has agreed AND WHEREAS the Contractor has applied to the President that he may be allowed advances on the security of materials absolutely belonging to him and brought by him to the site of the works the subject of the said agreement for use in the construction of such of the works as he has undertaken to execute at rates fixed for the finished work (inclusive of the cost of materials and labour and other charges) AND WHEREAS the President has agreed to advance to the Contractor the sum of Rupees …… on the security of materials the quantities and other particulars of which are detailed in Accounts of Secured Advances attached to the Running Account Bill for the said works signed by the Contractor on ……and the President has reserved to himself the option of making any further advance or advances on the security of other materials brought by the Contractor to the site of the said works. Now THIS INDENTURE WITNESSETH that in pursuance of the said agreement and in consideration of the sum of Rupees ……on or before the execution of these presents paid to the Contractor by the President (the receipt whereof the Contractor doth hereby acknowledge) and of such further advances (if any) as may be made to him as aforesaid the Contractor doth hereby covenant and agree with the President and declare as follows: -

(1) That the said sum of Rupees ……..so advanced by the President to the Contractor as aforesaid and all or any further sum or sums advanced as aforesaid shall be employed by the Contractor in or towards expediting the execution of the said works and for no other purpose whatsoever.

(2) That the materials detailed in the said Account of Secured Advances which have been offered to and accepted by the President as security are absolutely the Contractor's own property and free from encumbrances of any kind and the contractor will not make any application for or receive a further advance on the security of materials which are not absolutely his own property and free from encumbrances of any kind and the Contractor indemnifies the President against all claims to any materials in respect of which an advance has been made to him as aforesaid.

(3) That the materials detailed in the said Account of Secured Advances and all other materials on the security of which any further advance or advances may hereafter be made as aforesaid (hereinafter called the said materials) shall be used by the Contractor solely in the execution of the said works in accordance with the directions of the Divisional Officer …….. Division (hereinafter called the Divisional Officer) and in the term of the said agreement.

(4) That the Contractor shall make at his own cost all necessary and adequate arrangements for the proper watch, safe custody and protection against all risks of the said materials and that until used in construction as aforesaid

the said materials shall remain at the site of the said works in the Contractor's custody and on his own responsibility and shall at all times be open to inspection by the Divisional Officer or any officer authorised by him. In the event of the said materials or any part thereof being stolen, destroyed or damaged or becoming deteriorated in a greater degree than is due to reasonable use and wear thereof the Contractor will forthwith replace the same with other materials of like quality or repair and make good the same as required by the Divisional Officer.

(5) That the said materials shall not on any account be removed from the site of the said works except with the written permission of the Divisional Officer or an officer authorised by him on that behalf.

(6) That the advances shall be repayable in full when or before the Contractor receives payment from the President of the price payable to him for the said works under the terms and provisions of the said agreement. Provided that if any intermediate payments are made to the Contractor on account of work done than on the occasion of each such payment the President will be at liberty to make a recovery from the Contractor's bill for such payment by deducting there from the value of the said materials then actually used in the construction and in respect of which recovery has not been made previously, the value for this purpose being determined in respect of each description of materials at the rates at which the amounts of the advances made under these presents were calculated.

(7) That if the Contractor shall at any time make any default in the performance or observance in any respect of any of the terms and provisions of the said agreement or of these presents the total amount of the advance or advances that may still be owing to the President shall immediately on the happening of such default be repayable by the Contractor to the President together with interest thereon at twelve per cent per annum from the date or respective dates of such advance or advances to the date of repayment and with all costs charges, damages and expenses incurred by the President in or for the recovery thereof or the enforcement of this security or otherwise by reason of the default of the Contractor and the Contractor hereby covenants and agrees with the President to repay and pay the same respectively to him accordingly.

(8) That the Contractor hereby charges all the said materials with the repayment to the President of the said sum of Rupees .....and any further sum or sums advanced as aforesaid and all costs charges, damages and expenses payable under these presents PROVIDED ALWAYS and it is hereby agreed and declared that notwithstanding anything in the said agreement and without prejudice to the powers contained therein if and whenever the covenant for payment and repayment herein before contained shall become enforceable and the money owing shall not be paid in accordance therewith the President may at any time thereafter adopt all or any of the following courses as he may deem best :-

(a) Size and utilize the said materials or any part thereof in the completion of the said works on behalf of the Contractor in accordance with the provisions in that behalf contained in the said agreement debiting the Contractor with the actual cost of effecting such completion and the amount due in respect of advances under these presents and crediting the Contractor with the value of work done as if he had carried it out in accordance with the said agreement and at the rates thereby provided. If the balance is against the Contractor he is to pay same to the President on demand.

b) Remove and sell by public auction the seized materials or any part thereof and out of the moneys arising from the sale retain all the sums aforesaid repayable or payable to the President under these presents and pay over the surplus (if any) to the Contractor.

(c) Deduct all or any part of the moneys owing out of the security deposit or any sum due to the Contractor under the said agreement.

(9) That except in the event of such default on the part of the Contractor as aforesaid interest on the said advance shall not be payable.

(10) That in the event of any conflict between the provisions of these presents and the said agreement the provisions of these presents shall prevail and in the event of any dispute or difference arising over the construction or effect of these presents the settlement of which has not been herein before expressly provided for the same shall be finally resolved as per provisions of clause 25 of the contract.

In witness whereof the said ……and ……by the order and under the direction of the President have hereunto set their respective hands the day and year first above written.

Signed, sealed and delivered by…….. the said contractor in the presence of .....

……

Signature ……

Witness Name ……..

Address …….

Signed by……..

by the order and direction of the President in the presence of

Signature ……

Witness Name ……..

Address …….

APPENDIX - XVI
(Refer Clause 5)
FORM OF APPLICATION BY THE CONTRACTOR FOR SEEKING EXTENSION OF TIME

1. Name of contractor
2. Name of work as given in the agreement
3. Agreement no
4. Estimated amount put tender CON 297 Page 27
5. Date of commencement of work as per agreement
6. Period allowed for completion of work as per agreement
7. Date of completion stipulated in agreement
8. Period for which extension of time if has been given by authority in Schedule 'F' previously

letter no. and date	Extension granted	
	Months	Days
(a) 1st extension		
(b) 2nd extension		
(c) 3rd extension		
(d) 4th extension		
(e) Total extension previously given		

9. Reasons for which extension have been previously given (copies of the previous applications should be attached)
10. Period for which extension if applied for
11. Hindrances on account of which extension is applied for with dates on which hindrances occurred and the period for which these are likely to last (for causes under clause 5.2/ and 5.3).

Submitted to the Authority indicated in Schedule F With copy to the Engineer-in-charge and Sub Divisional Officer

Signature of Contractor

Dated .....

APPENDIX - XVII
Notice for appointment of Arbitrator
[Refer Clause 25]

To

The Chief Engineer/ADG/SDG
..... (Zone or Region)

.....

Dear Sir,

In terms of clause 25 of the agreement, particulars of which are given below, I/we hereby give notice to you to appoint an arbitrator for settlement of disputes mentioned below:

1. Name of applicant
2. Whether applicant is Individual/Prop. Firm/Partnership Firm/Ltd. Co.
3. Full address of the applicant
4. Name of the work and contract number in which arbitration sought
5. Name of the Division which entered into contract
6. Contract amount in the work
7. Date of contract
8. Date of initiation of work
9. Stipulated date of completion of work
10. Actual date of completion of work (if completed)
11. Total number of claims made
12. Total amount claimed
13. Date of intimation of final bill (if work is completed)
14. Date of payment of final bill (if work is completed)
15. Amount of final bill (if work is completed)
16. Date of appeal to you
17. Date of receipt of your decision.

Specimen signatures of the applicant
(only the person/authority who
signed the contract should sign)

I/We certify that the information given above is true to the best of my/our knowledge. I/We enclose following documents.

1. We have exhausted provision of DRC as per clause 25 of this agreement.
2. Statement of claims with amount of claims.
3.
4.
5.

Yours faithfully,

(Signatures)

Copy in duplicate to:

1. The Executive Engineer,
   ……..…… Division.

Form of Earnest Money Deposit
Bank Guarantee Bond

WHEREAS, contractor..... (Name of contractor) (hereinafter called "the contractor") has submitted his tender dated ..... (date) for the construction of ..... (name of work) (hereinafter called "the Tender")

KNOW ALL PEOPLE by these presents that we ..... (name of bank) having our registered office at ..... (hereinafter called "the Bank") are bound unto ..... (Name and division of Executive Engineer) (hereinafter called "the Engineer-in-Charge") in the sum of Rs. ..... (Rs. in words .....) for which payment well and truly to be made to the said Engineer-in-Charge the Bank binds itself, his successors and assigns by these presents.

SEALED with the Common Seal of the said Bank this ..... day of ..... 20... . THE CONDITIONS of this obligation are:

(1) If after tender opening the Contractor withdraws, his tender during the period of validity of tender (including extended validity of tender) specified in the Form of Tender;

(2) If the contractor having been notified of the acceptance of his tender by the Engineer-in-Charge:

(a) fails or refuses to execute the Form of Agreement in accordance with the Instructions to contractor, if required;

OR

(b) fails or refuses to furnish the Performance Guarantee, in accordance with the provisions of tender document and Instructions to contractor,

We undertake to pay to the Engineer-in-Charge either up to the above amount or part thereof upon receipt of his first written demand, without the Engineer-in-Charge having to substantiates his demand, provided that in his demand the Engineer-in-Charge will note that the amount claimed by his is due to him owing to the occurrence of one or any of the above conditions, specifying the occurred condition or conditions.

This Guarantee will remain in force up to and including the date* ..... after the deadline for submission of tender as such deadline is stated in the Instructions to contractor or as it may be extended by the Engineer-in- Charge, notice of which extension(s) to the Bank is hereby waived. Any demand in respect of this Guarantee should reach the Bank not later than the above date.

DATE .....

SIGNATURE OF THE BANK

WITNESS .....

SEAL

(SIGNATURE, NAME AND ADDRESS)

*Date to be worked out on the basis of validity period of 6 months from last date of receipt of tender

Form of Performance Security (Guarantee)
Bank Guarantee Bond - Format - I

In consideration of the President of India (hereinafter called "The Government") having offered to accept the terms and conditions of the proposed agreement between……..and ……..…… (hereinafter called "the said Contractor(s)") for the work…… (hereinafter called "the said agreement") having agreed to production of an irrevocable Bank Guarantee for Rs. …… (Rupees …… only) as a security/guarantee from the contractor(s) for compliance of his obligations in accordance with the terms and conditions in the said agreement.

1. We, ……. (hereinafter referred to as "the Bank") hereby undertake to pay to the Government an amount not exceeding Rs. …….. (Rupees……. Only) on demand by the Government.
2. We, ……(indicate the name of the Bank) do hereby undertake to pay the amounts due and payable under this guarantee without any demure, merely on a demand from the Government stating that the amount claimed as required to meet the recoveries due or likely to be due from the said contractor(s). Any such demand made on the bank shall be conclusive as regards the amount due and payable by the bank under this Guarantee. However, our liability under this guarantee shall be restricted to an amount not exceeding Rs. …….. (Rupees ……only)
3. We, the said bank further undertake to pay the Government any money so demanded notwithstanding any dispute or disputes raised by the contractor(s) in any suit or proceeding pending before any court or Tribunal relating thereto, our liability under this present being absolute and unequivocal. The payment so made by us under this bond shall be a valid discharge of our liability for payment thereunder and the Contractor(s) shall have no claim against us for making such payment.
4. We, ……. (indicate the name of the Bank) further agree that the guarantee herein contained shall remain in full force and effect during the period that would be taken for the performance of the said agreement and that it shall continue to be enforceable till all the dues of the Government under or by virtue of the said agreement have been fully paid and its claims satisfied or discharged or till Engineer-in- Charge on behalf of the Government certified that the terms and conditions of the said agreement have been fully and properly carried out by the said Contractor(s) and accordingly discharges this guarantee.
5. We, ……. (indicate the name of the Bank) further agree with the Government that the Government shall have the fullest liberty without our consent and without affecting in any manner our obligation hereunder to vary any of the terms and conditions of the said agreement or to extend time of performance by the said Contractor(s) from time to time or to postpone for any time or from time to time any of the powers exercisable by the Government against the said contractor(s) and to forbear or enforce any of the terms and conditions relating to the said agreement and we shall not be relieved from our liability by reason of any such variation, or extension being granted to the said Contractor(s) or for any forbearance, act of omission on the part of the Government or any indulgence by the Government to the said Contractor(s) or by any such matter or thing whatsoever which under the law relating to sureties would, but for this provision, have effect of so relieving us.
6. This guarantee will not be discharged due to the change in the constitution of the Bank or the Contractor(s).
7. We, ……. (indicate the name of the Bank) lastly undertake not to revoke this guarantee except with the previous consent of the Government in writing.
8. This guarantee shall be valid up to ……unless extended on demand by the Government. Notwithstanding anything mentioned above, our liability against this guarantee is restricted to Rs. …… (Rupees ……..) and unless a claim in writing is lodged with us within six months of the date of expiry or the extended date of expiry of this guarantee all our liabilities under this guarantee shall stand discharged. Dated the ……..day of ……for…….(indicate the name of the Bank)

Form of Performance Security (Guarantee)
Bank Guarantee Bond- Format -II

In consideration of the President of India (hereinafter called "The Government") having offered to accept the terms and conditions of the proposed agreement between…….and ……..…… (hereinafter called "the said Contractor(s)") for the work…… (hereinafter called "the said agreement") having agreed to production of an irrevocable Bank Guarantee for Rs. …… (Rupees …… only) as a security/guarantee from the contractor(s) for compliance of his obligations in accordance with the terms and conditions in the said agreement.

1. We, ……. (hereinafter referred to as "the Bank") hereby undertake to pay to the Government an amount not exceeding Rs. …….. (Rupees……. Only) on demand by the Government.
2. We, ……(indicate the name of the Bank) do hereby undertake to pay the amounts due and payable under this guarantee without any demure, merely on a demand from the Government stating that the amount claimed as required to meet the recoveries due or likely to be due from the said contractor(s). Any such demand made on the bank shall be conclusive as regards the amount due and payable by the bank under this Guarantee. However, our liability under this guarantee shall be restricted to an amount not exceeding Rs. …….. (Rupees …….only)
3. We, the said bank further undertake to pay the Government any money so demanded notwithstanding any dispute or disputes raised by the contractor(s) in any suit or proceeding pending before any court or Tribunal relating thereto, our liability under this present being absolute and unequivocal. The payment so made by us under this bond shall be a valid discharge of our liability for payment thereunder and the Contractor(s) shall have no claim against us for making such payment.
4. We, ……. (indicate the name of the Bank) further agree that the guarantee herein contained shall remain in full force and effect during the period that would be taken for the performance of the said agreement and that it shall continue to be enforceable till all the dues of the Government under or by virtue of the said agreement have been fully paid and its claims satisfied or discharged or till Engineer-in- Charge on behalf of the Government certified that the terms and conditions of the said agreement have been fully and properly carried out by the said Contractor(s) and accordingly discharges this guarantee.
5. We, ……. (indicate the name of the Bank) further agree with the Government that the Government shall have the fullest liberty without our consent and without affecting in any manner our obligation hereunder to vary any of the terms and conditions of the said agreement or to extend time of performance by the said Contractor(s) from time to time or to postpone for any time or from time to time any of the powers exercisable by the Government against the said contractor(s) and to forbear or enforce any of the terms and conditions relating to the said agreement and we shall not be relieved from our liability by reason of any such variation, or extension being granted to the said Contractor(s) or for any forbearance, act of omission on the part of the Government or any indulgence by the Government to the said Contractor(s) or by any such matter or thing whatsoever which under the law relating to sureties would, but for this provision, have effect of so relieving us.
6. This guarantee will not be discharged due to the change in the constitution of the Bank or the Contractor(s).
7. We, ……. (indicate the name of the Bank) lastly undertake not to revoke this guarantee except with the previous consent of the Government in writing.
8. This guarantee shall be valid up to ……unless extended on demand by the Government. Notwithstanding anything mentioned above, our liability against this guarantee is restricted to Rs. …… (Rupees ……..)

PROFORMA OF SCHEDULES

(Separate Performa for Civil, Elect. & Hort. Works in case of Composite Tenders)

SCHEDULE 'A'

Schedule of quantities (as per PWD-3)

SCHEDULE 'D'

Extra schedule for specific requirements/document for the work, if any.

SCHEDULE 'E'

Reference to General Conditions of contract.

Name of work: .....

.....

Estimated cost of work: Rs. .....

(i) Earnest money: Rs. ..... (to be returned after receiving performance guarantee)

(ii) Performance Guarantee : 5% of tendered value.

(iii) Security Deposit : 2.5% of tendered value.

or

2.5% of tendered value plus 50% of PG for contracts involving maintenance of the building and services/ other work after construction of same building and services/ other work.

SCHEDULE 'F'

GENERAL RULES & DIRECTIONS : Officer inviting tender .....

Maximum percentage for quantity of items of work to be executed beyond which rates are to be determined in accordance with Clauses 12.2 & 12.3. See below

Definitions:

2(v)	Engineer-in-Charge	.....
2(viii)	Accepting Authority	.....
2(x)	Percentage on cost of materials and labour to cover all overheads and profits.	15%
2(xi)	Standard Schedule of Rates	.....
2(xii)	Department	.....
9(ii)	Standard CPWD contract Form GCC 2019, CPWD Form 7/ 8 as modified & corrected upto	.....

Clause 1

(i) Time allowed for submission of Performance Guarantee, programme chart (Time and progress)and applicable labour licenses, registration with EPFO, ESIC and BOCW welfare board or proof of applying there of from the date of issue of letter of acceptance ..... days

(ii) Maximum allowable extension with late fee @ 0.1% per day of Performance Guarantee amount beyond the period provided in (i) above .... days
(1 to 15 days to be filled by NIT approving authority)

Clause 2

Authority for fixing compensation under clause 2. .....

Clause 2A

Whether Clause 2A shall be applicable Yes / No

Clause 5

Number of days from the date of issue of letter of acceptance for reckoning date of start Mile stone(s) as per table given below:- ..... day

SI No.	Description of Milestone (Physical)	Time Allowed in days (from date of start)	Amount to be with-held in case of non achievement of milestone
1.			
2.			
3.			
4.			

Time allowed for execution of work. .....

Authority to decide:

(i) Extension of time ..... (Engineer in Charge or Engineer in Charge of Major Component in case of Composite Contracts, as the case may be)

(ii) Rescheduling of mile stones ..... (Superintending Engineer/PM/CPM in Charge or Superintending Engineer in Charge of Major Component in case of Composite Contracts, as the case may be)

(iii) Shifting of date of start in case of delay in handing over of site ..... (Superintending Engineer/ PM/CPM in Charge or Superintending Engineer/ PM/CPM in Charge of Major Component in case of Composite Contracts, as the case may be)

PROFORMA OF SCHEDULES Clause 5 Schedule of handing over of site

Part	Portion of site	Description	Time Period for handing over reckoned from date of issue of letter of intent.
Part A	Portion without any hindrance		
Part B	Portions with encumbrances		
Part C	Portions dependent on work of other agencies		

Clause 7

Gross work to be done together with net payment /adjustment of advances for material collected, if any, since the last such payment for being eligible to interim payment ₹ .....

Clause 7A

Whether clause 7A shall be applicable yes/No

Clause 8A

Authority to decide compensation on account if contractor fails to submit completion plans .....

Clause 10A

List of testing equipment to be provided by the contractor at site lab.

1. ..... 2. ..... 3. .....

4. ..... 5. ..... 6. .....

Clause 10B(ii)

Whether Clause 10 B (ii) shall be applicable Yes/No

Clause 10C

Component of labour expressed as percent of value of work: = ...%

Clause 10CA **Applicable/ Not Applicable**

Authority to issue base price of materials

S.N.	Materials Covered under this clause:	Nearest Materials (other than cement*, reinforcement bars, the structural steel and POL) for which All India Wholesale Price Index to be followed:	Base Price and its corresponding period of all the Materials covered under clause 10 CA*
1			
2			
3			
4			

* includes Cement component used in RMC brought at site from outside approved RMC plants, if any.

** Base price and its corresponding period of all the materials covered under clause 10 CA is to be mentioned at the time of approval of NIT. In case of recall of tenders, the base price may be modified by adopting latest base price and its corresponding period.

Clause 10CC **Applicable/ Not Applicable**

Clause 10 CC to be applicable in contracts with stipulated period of completion exceeding the period shown in next column ..... months

Schedule of component of other Materials, Labour etc. for price escalation.

Component of civil (except materials covered under clause 10CA) /Electrical construction value of work. - Xm ..... %

Component of Labour - expressed as percent of total value of work. Y ....%

Note : Xm .....% should be equal to (100) - (materials covered under clause 10CA i.e. Cement, Steel, POL and other material specified in clause 10CA + Component of Labour)

Clause 11

Specifications to be followed for execution of work .....

Clause 12

Authority to decide deviation upto 1.5 times of tendered amount .....

12.2 & 12.3 Deviation Limit beyond which clauses12.2 & 12.3 shall apply for building work .....

12.5

(i) Deviation Limit beyond which clauses 12.2 & 12.3 shall apply for foundation work (except items mentioned in earth work subhead in DSR and related items) .....

(ii) Deviation Limit for items mentioned in earth work subhead of DSR and related items .....

Clause 16

Competent Authority for deciding reduced rates .....

Clause 18

List of mandatory machinery, tools & plants to be deployed by the contractor at site:

1 ..... 2 ..... 3 .....

4 ..... 5 ..... 6 .....

7 ..... 8 ..... 9 .....

Clause 19C ..... authority to decide penalty for each default

Clause 19D ..... authority to decide penalty for each default

Clause 19G .....authority to decide penalty for each default

Clause 19K .....authority to decide penalty for each default

Clause 25

Constitution of Dispute Redressal Committee (DRC)

Chairman -

Member -

Member -

Clause 32

Requirement of Technical Representative(s) and recovery Rate

Sl No.	Minimum Qualification of Technical Representative	Discipline	Designation (Principal Techincal /Techincal representative)	Minimum Experience	Number	Rate at which recovery shall be made from the contractor in the event of not fulfilling provision of clause 36(i)	
						Figures	Words
1.							
2.							
3.							
4							
5							

Assistant Engineers retired from Government services that are holding Diploma will be treated at par with Graduate Engineers.

Diploma holder with minimum 10 year relevant experience with a reputed construction co. can be treated at par with Graduate Engineers for the purpose of such deployment subject to the condition that such diploma holders should not exceed 50% of requirement of degree engineers.

Clause 38

(i) (a) Schedule/statement for determining theoretical quantity of cement & bitumen on the basis of Delhi Schedule of Rates ..... printed by C.P.W.D.

(ii) Variations permissible on theoretical quantities:

(a)	Cement For works with estimated cost put to tender not more than Rs. 25 lakh.	3% plus/minus.
	For works with estimated cost put to tender more than Rs. 25 lakh..	2% plus/minus.
(b)	Bitumen All Works	2.5% plus & only & nil on minus side.
(c)	Steel Reinforcement and structural steel sections for each diameter, section and category	2% plus/minus
(d)	All other materials.	Nil

Annexure showing quantities of materials for areas of surfacing to be considered for working out minimum period of road roller

Sl. No.	Material of surfacing	Quantity or area
1.	Consolidation of earth sub grade	1860 Sq.m
2.	Consolidation of stones soling 15 cm. to 22.5 cm thick	170 Cu.m.
3.	Consolidation of brick soling 10 cm. to 20 cm. thick	230
4.	Consolidation of wearing coat of stone ballast 7.5 cm to 11.5 cm thick	30 Cu.m.
5.	Consolidation of wearing coat of brick ballast 10 cm. thick	60 Cu.m.
6.	Spreading and consolidation of red bajri 6 mm.	1860 Sq.m.
7.	Painting one coat using stone aggregate 12.5 mm nominal size-	
	(a) @ 1.65 m^3 per 100 m^2 and paving bitumen A-90 or S-90 @ 2.25 Kg per m^2	930 Sq.m.
	(b) 1.50 m^3 per 100 m^2 and bitumen emulsion or Road tar @ 2.25 Kg per m^2	930 Sq.m.
8.	Painting two coats using-	
	(a) For first coat, stone aggregate 12.5 mm nominal size:	
	(i) @ 1.50m^3 per 100m^2 with paving bitumen A-90 or S-90 @ 2 Kg per m^2	
	or	
	(ii) @ 1.35m^3 per 100m^2 with bitumen emulsion @ 2 Kg per m^2	
	or	
	(iii) @1.25 m^3 per 100m^2 with road tar @ 2.25 Kg per m^2	600 Sq.m
	(b) For 2nd Coat, stone aggregate 10mm nominal size 0.9 Cum. per 100 Sq.m with-	
	(i) 1kg of paving bitumen A-90 or S-90 or bitumen emulsion per Sq.m.or	
	(ii) 1.25 Kg. of road tar, per Sq.m.	600 Sq.m
9.	Re-painting with stone aggregate 10 mm nominal size 0.9 Cum. per 100 Sqm. with-	
	(a) 1Kg. of paving bitumen A-90 or S-90 per Sqm.or	
	(b) 1.25 kg of Bitumen emulsion per Sqm.	1670 Sq.m.
10.	2 cm premix carpet surfacing using 2.4 m^3 of stone aggregate 10 mm nominal size per 100 m^2 and binder including tack coat, the binder being hot cut back bitumen or bitumen emulsion specified quantities.	930 Sq.m.
11.	2.5 cm. premix carpet surfacing using 3m^3 of stone aggregate 10 mm nominal size per 100 m^2 and binder including tack coat, the binder being hot cut back Bitumenor bitumen emulsion in specified quantities.	930 S q.m.
12.	4 cm thick bitumen concrete surfacing using stone aggregate 3.8 Cu.m. (60% 20 mm nominal size and 40% 12.5 mm nominal size) per 100 m^2 and coarse sand 1.9 Cu.m. per 100 m^2 and hot cut back bitumen over a tack coat of hot cut back bitumen.	460 Sq.m.
13.	4 cm thick bitumen concrete surfacing using stone aggregate 4.8 Cu.m. (60% 25 mm nominal size and 40% 20 mm nominal size) per 100 m^2 and coarse sand 2.4 Cu.m per 100 Sq.m. and hot cut back bitumen over a tack coat of hot cut back bitumen	370 Sq.m.
14.	6cm thick bitumen concrete surfacing using stone aggregate 5.8 Cu.m. (60 % 40 mm. nominal size and 40% 25mm nominal size) per 100 Sq.m. and coarse sand 2.9 Cu.m. per100 Sq.m. and hot cut back bitumen over a tack coat of hot cut back bitumen. 280 Sq.m	230 Sqm

Sl. No.	Material of surfacing	Quantity or area
15.	7.5 cm thick bitumen concrete surfacing using stone aggregate 7.3 Cu.m. (60% 50mm nominal size and 40% 40 mm nominal size)per 100 Sq.m. and coarse sand 3.65 Cu.m.per 100 Sq.m. and hot cut back bitumen over a tack coat of hot cut back bitumen.	750 Sqm
16.	2.5 cm bitumastic sheet using stone aggregate 1.65 Cu.m. (60% 12.5 mm nominal size, 40%10 mm nominal size)per 100 Sq.m. and coarse sand 1.65 Cu.m. per 100 Sq.m. and hot cut back bitumen over a tack coat of hot cut back bitumen.	750 Sq.m.
17.	4cm bitumastic sheet, using stone aggregate 2.6 Cu.m. (60%12.5mm nominal size 40%10 mm nominal size) per 100 Sq.m., coarse sand 2.5 Cu.m. per 100 Sq.m. and hot cut back bitumen over a tack coat of hot bitumen.	560 Sqm
18.	Laying full grouted surface using stone aggregate 40 mm nominal size 6.10Cu.m. per 100 Sq.m. with binder, binding with 20mm to 12.5 mm nominal size stone grit. 1.83 Cu.m. per 100 Sq.m. and seal coat of binder and stone grit 10mm nominal size, 1.07Cu.m. per 100 Sq.m., the binder being hot bitumen or tar as specified.	460 Sqm
19.	Laying full grouted surface using stone aggregate 50 mm nominal size 9.14 Cu.m. per 100 sq.m. groutin with binder, with stone grit 20 mm to to 12.5 mm nominal size, 1.83 Cu.m. per 100 Sq.m. and seal coat of binder and stone grit 10mm nominal size 1.07 cu.m /100 Sqm	370 Sqm
20.	4cm. thick premix macadum surfacing using stone aggregate 25mm nominal size 4.57 Cu.m. per 100 Sq.m and hot bitumen binding with stone aggregate 12.5 mm nominal size 1.52 Cu.m.per 100 Sq.m. and seal coat of hot bitumen and stone aggregate 10mm nominal size. 1.07 Cu.m. per 100 Sq.m.	560 Sq.m.
21.	5cm thick premix macadum surfacing with stone aggregate 25 mm nominal size, 6.10 Cu.m. per 100 Sq.m and hot bitumen binding with stone aggregate 12.5 mm nominal size 1.52 Cu.m. per 100 Sq.m. and seal coat of hot bitumen and stone aggregate10mm nominal size 1.07 Cu.m. per 100 Sq.m	460 Sq.m.

सत्यमेव जयते

Government of India
Ministry of Housing & Urban Affairs
CENTRAL PUBLIC WORKS DEPARTMENT

All rights reserved. No part of this publication may be reproduced or transmitted in any form or by any means, electronic or mechanical, **including photocopy,** recording, or any information storage and retrieval system, without permission in writing from the DG, CPWD. Printing by any other person is strictly prohibited, Any unauthorized person printing and/ or supplying the book will be prosecuted under the law.

Price : Rs. 100.00
Delivery/ Forwarding Charges/ Postage/ Freight Charges Extra

A Government of India Publication
Published by
Director General, CPWD, Nirman Bhawan, New Delhi- 110011.

Printed & Marketed by
JAIN BOOK AGENCY (CENTRAL)
4574/15, 2nd Floor, Padamchand Marg, Near Happy School, Daryaganj, New Delhi-110002
Phone : 011-43513689, 43513570 Mob: 9667274446, 9810666810
E-mail : thakur@jainbookagency.com